Innovative Aquarium Technology

EHEIM

List of spare parts 2022

Range of spare parts

Aquariums | Filters | Pumps | Accessories | Pond

Contents

Article		Page
Tables		
List of impellers and shafts for internal filters		3
List of impellers and shafts for external filters		4
List of impellers and shafts for aquarium and stream pumps		5
List of impellers and shafts for aquarium and universalpumps		6
List of spare pump heads		7, 8
Pumps, air pumps		
1000 - 1002	**compact** 300, 600, 1000	78
1100 / 1101	**compact+** 2000, 3000	79
1102	**compact+** 5000	80
1103	**compact+**marine	81
1020 - 1022	**compactON** 300, 600, 1000, **série XXXX01**	82
1020 - 1022	**compactON** 300, 600, 1000, **série XXXX02**	84
1030 - 1031	**compactON** 2100, 3000, **série XXXX01**	83
1030 - 1031	**compactON** 2100, 3000, **Série XXXX02**	85
1032 - 1034	**compactON** 5000	86
1033 - 1035	**compactON** 9000, 12000, 16000	87
1005	**universal** 270	88
1046	**universal** 300	89
1048	**universal** 600	90
1250	**universal** 1200	91
1260 - 1264	**universal** 2400, 3400, 4500	92
1070 - 1072	**streamON** 1800, 3000, 3800	93
1080 - 1082	**streamON+** 2000, 4000, 5000	94
1180	**streamON+** 3500	95
1181 / 1182	**streamON+** 6500, 9500	96
1212	**Powerhead** 650	16
3701 - 3704	**air pump** 100, 200, 400	69
Internal aquarium filters		
2000	**aquacorner**60	9
2006	**pickup** 45	11
2008 - 2012	**pickup** 60, 160, 200	12
2048	**powerline** 200	14
2203 / 2204	**miniFLAT** et **miniUP**	10
2206 - 2208	**aqua** 60, 160, 200	13
2252	**powerline** XL	15
2400	**aquaball** 45	17
2401 - 2403	**aquaball** 60, 130, 180	18
2411 - 2413	**biopower** 160, 200, 240	19
External aquarium filters		
2004 / 2005	**aquacompact** 40, 60	21
2040 - 2042	**LiBERTY**	20
2211	**classic** 150	22
2213	**classic** 250	23
2215	**classic** 350	24
2217	**classic** 600	25
2260	**classic**1500XL	26
2032 - 2036	**eccopro** 130, 200, 300	28
2231 - 2236	**ecco** 130, 200, 300	28
2422 / 2424	**eXperience** 150, 250	29
2124	**eXperience** 250T	29
2426	**eXperience** 350	30
2071 - 2075	**professionel 3** 250, 350 600	31, 32
2173 / 2173	**professionel 3** 250T, 350T	31, 32
2080	**professionel 3** 1200XL	33, 34
2180	**professionel 3** 1200XLT	33, 34
2074	**professionel 3e** 350	35, 36
2076 / 2078	**professionel 3e** 450, 700	37, 38
2178	**professionel 3e** 600T	37, 38
2271 - 2275	**professionel 4+** 250, 350, 600	39, 40
2371 / 2373	**professionel 4+** 250T, 350T	39, 40
2274	**professionel 4e+** 350	41, 42
2274	**professionel 5e+** 350	43, 44
2076 / 2078	**professionel 5e** 450, 700	45, 46
2178	**professionel 5e** 600T	45, 46
Aquarium heater		
3611 - 3619	**thermocontrol** 25W - 300W	67
3651 - 3657	**thermopreset** 50W, 100W, 150W, 200W	67
3631 - 3640	**thermocontrol e** 25W - 400W	68
3666 - 3670	**thermocontrol +e** 150W - 400W **(Wifi)**	68

Article		Page
Equipment and accessories		
3531	Automatic gravel cleaner **Quick Vac** pro	51
3533	Glass scraper **powerCleaner**	52
3535	Surface skimmer	53
3536	Surface extractor **skim**350	54
3540	Undergravel filter reverse flow principle	64
3541	Undergravel filter suction principle	64
3551	Nano protein skimmer **skim**marine100	61
3549	Mini Protein skimmer **skim**marine300	62
3552	Protein skimmer **skim**marine 600	63
3582	Automatic fish feeder **TWINfeeder**	65
3583	Wifi automatic feeder auto**feeder+**	66
3721 - 3723	UV - Steriliser **reeflexUV** 350, 500, 800 up to serial 193604	70
3721 - 3723	UV - Steriliser **reeflexUV** 350, 500, 800 from serial no. 193605	70
3721 - 3725	UV - Steriliser **reeflexUV** 350, 500, 800, 1500, 2000 from Serial no. 211610	71
3750 - 3752	Climate control unit **climacontrol+** S, M, L	72
Installation accessories		
4002510	Gravel cleaner set	55
4003000	Air Filter	56
4004300	InstallationKIT1 for Ø 12 mm	57
4005300	InstallationKIT1 for Ø 16 mm	57
4004310	InstallationKIT2 for Ø 12 mm	58
4005310	InstallationKIT2 for Ø 16 mm	58
4004320	Prefilter	59
4004620	Prefilter	60
LED lighting		
4211 - 4245	**powerLED**	73
4251 - 4259	**powerLED+**	73
4261 - 4264	**classicLED**	73
CO_2 systems		
6063200	**CO_2 SET**200	74
6063400	**CO_2 SET**400	75
6063600	**CO_2 SET**600	76
6064	**CO_2 night shut-off**	77
Nano aquarium sets, LED lamp		
6400 - 6402	**aquastyle** 16, 24, 35	47
6406	**nanoshrimp** 35	48
6410	**nanomarine** 35	49
6471	**powerLED**	50
Fountain sets with jet		
5100 / 5101	**PLAY** 1000, 1500	97
5102 / 5103	**PLAY** 2500, 3500 **série XXXX01**	98
5102 / 5103	**PLAY** 2500, 3500 **série XXXX02**	99
Pond pumps		
5110 / 7604	**FLOW** 2500, 3500 **série XXXX01**	100
5110 / 7604	**FLOW** 2500, 3500 **série XXXX02**	101
5111 / 5112	**FLOW** 5000, 6500	102
5113 - 5115	**FLOW** 9000, 12000, 16000	103
Pond filters		
5200 / 5201	**LOOP** 5000, 7000	104
5202 / 5203	**LOOP** 10000, 15000	105
5205	**MODUL**4000	106
5215 / 5216	**LOOP**pro 6000, 8000	107
5210 / 5212	**PRESS** 7000	108
5211 / 5213	**PRESS** 10000	109
Pond accessories		
5300 - 5303	UV - Steriliser **CLEAR**UVC 7, 9, 11, 18	110
5304 - 5306	UV - Steriliser **CLEAR**UVC 24, 36, 60	111
5320 / 5321	Pond aerator **AIR**500, 1000	112
5340	Ice preventer **THERMO**200	113
5360	Pond vacuum cleaner **VAC**40	114
5360005	Nozzle set for **VAC40**	114

 © EHEIM, Germany

List of ompellers and shafts for internal filters

Frequency (see type plate on pump housing)		Regions / Continent
50 Hz		Western & Eastern Europe, Africa, Australia, New Zealand
60 Hz		North- and Central America, Korea, Philippines, Saudi Arabia, Taiwan
50 Hz	60 Hz	Asia, South Amerika, Japan

		EHEIM aquaCorner	EHEIM pickup				EHEIM miniFLAT	EHEIM miniUP	EHEIM skim350
		60	45	60	160	200			350
Internal filters									
Type		2000	2006	2008	2010	2012	2203	2204	3536
	50 Hz	7445858	7654600	7655250	7655250	7655400	7445858	7445858	7445858
	60 Hz	*7445868*	*7654610*	*7655260*	*7655260*	*7655410*	*7445868*	*7445868*	*7445868*
		--	7480500	7480500	7480500	7480500	--	--	--

				EHEIM aquaball			
	60	160	200	45	60	130	180
Internal filters							
Type	2206	2207	2208	2400	2401	2402	2403
	7445868	7481728	7481728	7655400	7655400	7655460	7655460
	7445868	*7481728*	*7481728*	*7645430*	*7645430*	*7655450*	*7655450*
	--	--	--	7480500	7480500	7480500	7480500

		EHEIM biopower			EHEIM PowerLine	
		160	*200*	*240*	*200*	*XL*
Internal filters						
Type		2411	2412	2413	2048	2252
	50 Hz	7655460	7655460	7655440	7640950	7645950
	60 Hz	*7655450*	*7655450*	*7655490*	*7645960*	*7640960*
		7480500	7480500		7480500	7444400

© EHEIM, Germany

List of ompellers and shafts for external filters

Frequency (see type plate on pump housing)		Regions / Continent
50 Hz		Western & Eastern Europe, Africa, Australia, New Zealand
60 Hz		North- and Central America, Korea, Philippines, Saudi Arabia, Taiwan
50 Hz	60 Hz	Asia, South Amerika, Japan

		EHEIM LiBERTY			EHEIM aquacompact		EHEIM classic					
		75	*130*	*200*	*40*	*60*	*150*	*250*	*350*	*600*		*1500XL*
External filters												
Type		**2040**	**2041**	**2042**	**2004**	**2005**	**2211**	**2213 2313**	**2215 2315**	**2217 2317**	**2250**	**2260**
	50 Hz	7600468	7600478	7600488	7635920	7635920	7632100	7632600	7633090	7633590	7640950	7653058
	60 Hz	*7600158*	*7600168*	*7600178*	*7635930*	*7635930*	*7632110*	*7632610*	*7633100*	*7633600*	*7640960*	*7653068*
		--	--	--	--	--	7433710	7433710	7438430	7438430	7444400	7443100

		EHEIM ecco pro			EHEIM ecco			EHEIM professionel					
		130	*200*	*300*				*150*	*250,250T*				
External filters													
Type		**2032**	**2034**	**2036**	**2231 2232**	**2233 2234**	**2235 2236**	**2222 2322**	**2224 2324**	**2226 2326**	**2227 2327**	**2228 2328**	**2229 2329**
	50 Hz	7603350	7603350	7603450	7600420	7600420	7600430	7657360	7657360	7656200	7656200	7656200	7656200
	60 Hz	*7600420*	*7600420*	*7600430*	*7600420*	*7600420*	*7600430*	*7657370*	*7657370*	*7656210*	*7656210*	*7656210*	*7656210*
		7444390	7444390	7444390	7444390	7444390	7444390	7433720	7433720	7444400	7444400	7444400	7444400

		EHEIM professionel II		EHEIM eXperience			EHEIM professionel 3		EHEIM professionel 4+		EHEIM professionel 3e	EHEIM professionel 5e	
				150	*250 250T*	*350*	*250 250T*	*350*	*600 350T*	*1200XL 1200XLT*	*350*	*450*	*700 600T*
External filters													
Type		**2026 2126**	**2028 2128**	**2422**	**2424 2124**	**2426**	**2071/2271 2171/2371**	**2073 2273**	**2075/2275 2173/2371**	**2080 2180**	**2074 2274**	**2076**	**2078 2178**
	50 Hz	7656180	7656180	7657360	7657360	7656200	7603420	7603330	7603330	7603058	7603220	7603220	7603220
	60 Hz	*7656190*	*7656190*	*7657370*	*7657370*	*7656210*	*7603350*	*7603340*	*7603340*	*7603068*	*7603220*	*7603220*	*7603220*
		7444390	7444390	7433720	7433720	7444400	7444390	7444390	7444390	7444390	7428590	7428590	7428590

© EHEIM, Germany

List of impellers and shafts for aquarium and stream pumps

Frequency (see type plate on pump housing)		Regions / Continent
50 Hz		Western & Eastern Europe, Africa, Australia, New Zealand
60 Hz		North- and Central America, Korea, Philippines, Saudi Arabia, Taiwan
50 Hz	60 Hz	Asia, South Amerika, Japan

		EHEIM compact			EHEIM compact+			
		300	*600*	*1000*	*2000*	*3000*	*5000*	*marine*
Aquarium pumps								
Type		**1000**	**1001**	**1002**	**1100**	**1101**	**1102**	**1103**
	50 Hz	7445858	7445878	7445898	**no longer available**	7446468	7446488	7447218
	60 Hz	*7445868*	*7445888*	*7445908*	*7446458*	*7446478*	*7446498*	*7447448*
		--	--	--	--	--	--	--

		EHEIM streamON	EHEIM streamON+		EHEIM streamON+		
		1800 2000	*1800 2000*	*3000 4000*	*3500*	*6500*	*9500*
Aquarium pumps							
Type		**1070 1080**	**1071 1081**	**1072 1082**	**1180**	**1181**	**1182**
	50 Hz	7448158	7448258	7448358	7605570	7605880	7605970
	60 Hz	*7448168*	*7448268*	*7448368*	*7605580*	*7605890*	*7605980*
		--	--	--	--	--	--

		EHEIM compactON								
		300	*600*	*1000*	*2100*	*3000*	*5000*	*9000*	*12000*	*16000*
Aquarium pumps										
Type		**1020**	**1021**	**1022**	**1030**	**1031**	**1032**	**1033**	**1034**	**1035**
	50 Hz	7633658	7633678	7633698	7604458	7633738	7604078	7604178	7604278	7608178
	60 Hz	*7633668*	*7633688*	*7633708*	*7604468*	*7633748*	*7604088*	*7604188*	*7604288*	*7608188*
		--	--	--	7482020	7482020	--	--	--	--

© EHEIM, Germany

List of impellers and shafts for aquarium and universalpumps

Frequency (see type plate on pump housing)		Regions / Continent
50 Hz		Western & Eastern Europe, Africa, Australia, New Zealand
60 Hz		North- and Central America, Korea, Philippines, Saudi Arabia, Taiwan
50 Hz	60 Hz	Asia, South Amerika, Japan

		EHEIM aquadali	EHEIM universal					
			300	600	1200	2400	3400	
Aquarium pumps								
Type		1212	1005	1046	1048	1250/1252	1260	1262
	50 Hz	7655460	7652950	7644990	7645990	7640900	7653058	7653058
	60 Hz	*7655450*	*7652960*	*7644980*	*7645980*	*7640910*	*7653068*	*7653068*
		7480500	7442480	7433720	7433720	7444400	7443100	7443100

List of impellers and shafts for pond pumps and pond filters

		EHEIM PLAY				EHEIM FLOW						
		1000	1500	2500	3500	2500	3500	5000	6500	12000	16000	
Pond pumps and Pond filters												
Type		5100	5101	5102	5103	7604	5110	5111	5112	5113	5114	5115
	50 Hz	7604058	7604258	7604458	7604478	7604458	7604478	7604028	7604078	7604178	7604278	7608178
	60 Hz					--	--	--	--	--	--	--
		--	--	7482020	7482020	7482020	7482020	--	--	--	--	--

		EHEIM PRESS		EHEIM LOOP				EHEIM LOOPpro	
		7000	10000	5000	7000	10000	15000	6000	8000
Pond pumps and Pond filters									
Type		5210	5211	5200	5201	5202	5203	5215	5216
	50 Hz	7604458	7604478	7604258	7604458	7604478	7604028	7604258	7604458
	60 Hz	--	--	--	--	--	--	--	--
		7482020	7482020	--	7482020	7482020	--	--	7482020

© EHEIM, Germany

List of spare pump heads

EHEIM

		EHEIM aquacompact	EHEIM PowerLine		EHEIM classic					
		40, 60	200	XL	150	250	350	600		1500XL
Aquarium filters										
	Type	2004/2005	2048	2252	2211	2213	2215	2217	2250	2260
230V/50Hz	Europe	1205010	1048219	1252219	1211019	1213019	1215019	1217019	1253229	1260220
240V/50Hz	UK	1205110	--	--	--	1213119	1215119	1217119	1253349	1260350
	Australia	--	--	--	--	1213129	1215129	1217129	--	1260360
120V/60Hz	USA	1205090	1048319	--	--	--	1215099	1217099	--	1260310
100V/50Hz	Japan	1205080	--	1252289	1211089	1213089	1215089	1217079	1253289	1260280
100V/60Hz			--	1252329				1217109	1253329	1260320
220V/60Hz	USA	--	--	1252419	--	1213189	1215189	1217189	--	--
	Korea	1205200	--	--	--	--	--	--	--	1260420

		EHEIM ecco pro		EHEIM ecco		EHEIM professionel II	EHEIM professionel		
		130, 200	300				150, 250, 250T		
Aquarium filters									
	Type	2032 2034	2036	2231/2233 2232/2234	2235 2236	2026/2126 2028/2128	2222/2322 2224/2324	2226/2326 2228/2328	2227/2327 2229/2329
230V/50Hz	Europe	1334010	1336010	1234010	1236010	no longer available	1224019	1228019	no longer available
240V/50Hz	UK	1334110	1336110	1234110	1236110		1224119	1228119	
	Australia	--	--	1234120	1236120		1224129	1228129	
120V/60Hz	USA	--	--	--	--		1224099	--	
100V/50Hz	Japan	--	--	1234070	1236070		1224079	1228079	
100V/60Hz		--	--					1228109	
220V/60Hz	USA	--	--	1234180	1236180		1224189	1228189	
	Korea	--	--	1234200	1236200		1224209	1228209	

		EHEIM eXperience		EHEIM professionel 3					EHEIM professionel 3e		
		150, 250/250T	350	250 250T	350	600 350T	1200 XL	1200 XLT	350	450	700 600T
Aquarium filters											
	Type	2422 2424	2426	2071 2171	2073	2075 2173	2080	2180	2074	2076	2078 2178
230V/50Hz	Europe	1224019	1228019	1271010	1275010	1275010	1280010	1780010	1274000 While stock lasts	1276000 no longer available	1278000 no longer available
240V/50Hz	UK	1224119	1228119	1271110	1275110	1275110	1280110	1780110			
	Australia	1224129	1228129	1271120	1275120	1275120	1280120	1780120			
120V/60Hz	USA	1224099	--	1271090	1275090	1275090	1280090	1780090			
100V/50Hz	Japan	1224079	1228079	1271080	1275080	1275080	1280070	1780070			
100V/60Hz			1228109				1280100	1780100			
220V/60Hz	USA	1224189	1228189	--	--	--	1280180	1780180			
	Korea	1224209	1228209	--	--	--	1280200	--			

© EHEIM, Germany

List of spare pump heads

			EHEIM professionel4+		
			250 250T	350	600 350T
Aquarium filters					
		Type	**2271** **2371**	**2273**	**2275** **2373**
230V/50Hz	Europe		1371010	1375010	1375010
240V/50Hz	UK		1371110	1375110	1375110

			EHEIM professionel4°+	EHEIM professionel5°		
			350	350	450	700 600T
Aquarium filters						
		Type	**2274**	**2274**	**2076**	**2078** **2178**
24V			1374000 **While stock lasts**	1474000	1476000	1478000

© EHEIM, Germany

2000 Internal filter aquaCorner60

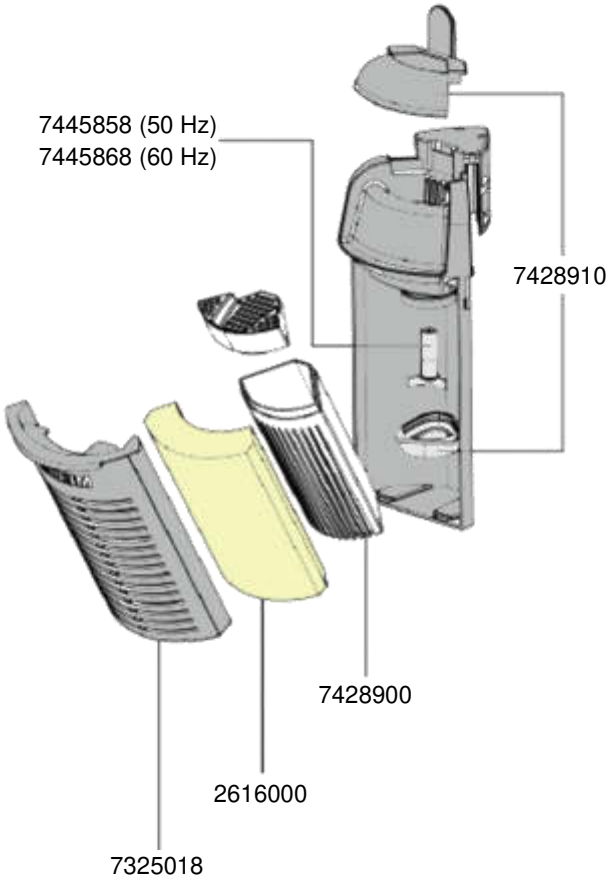

Order no.	Spare part
2616000	Filter cartridge (2 pieces)
7325018	Filter cover
7428900	Mediabox with cover
7428910	Set cover
7445858	Impeller (50 Hz)
7445868	Impeller (60 Hz)

© EHEIM, Germany

2203 Shallow water filter miniFLAT
2204 Internal filter miniUP

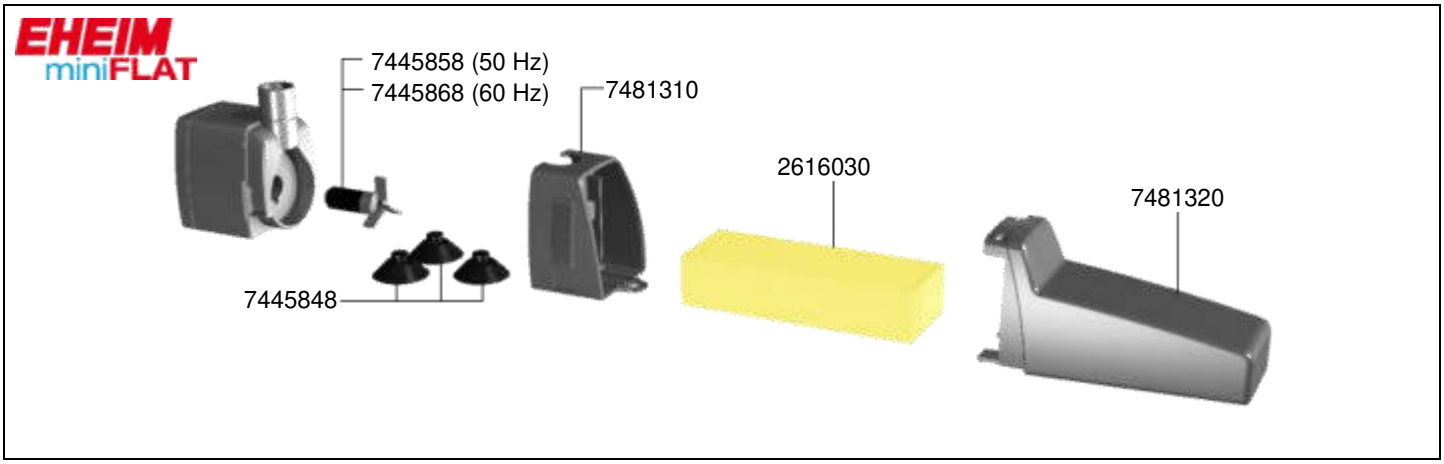

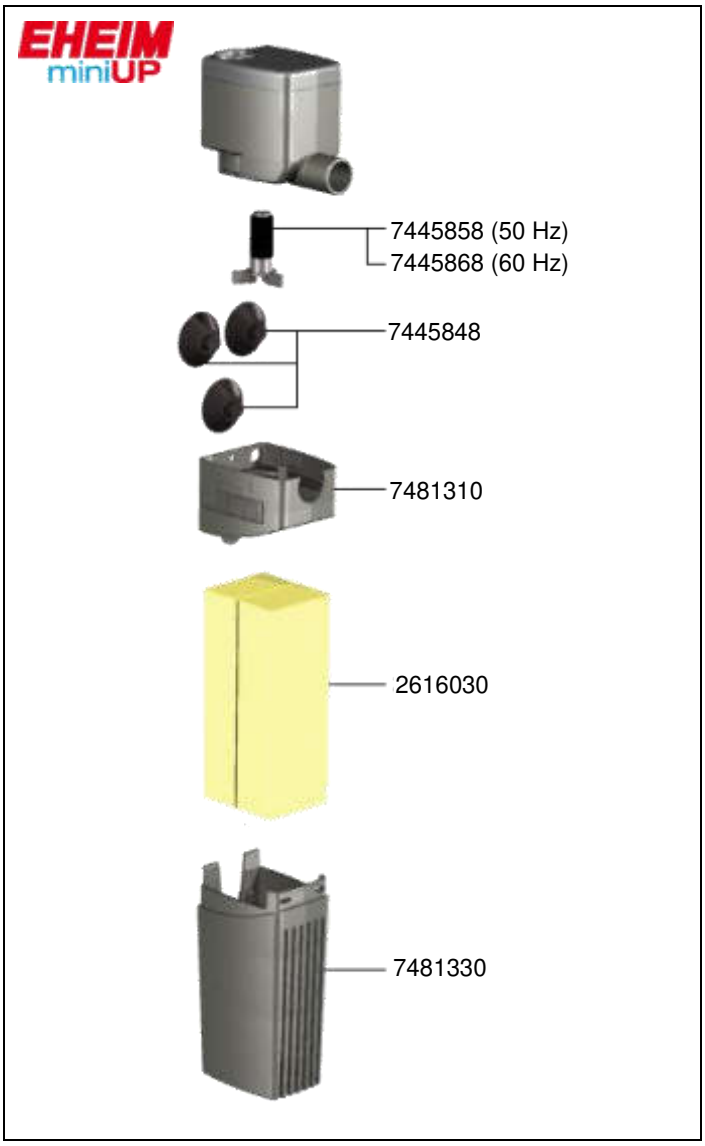

Order no.	Spare part
2616030	Filter cartridge (2 pieces)
7445848	Suction cup (4 pieces)
7445858	Impeller 50 Hz
7445868	Impeller 60 Hz
7481310	Pump cover complete with power regulator
7481320	Filter basket with filter cartridge for **miniFLAT**
7481330	Filter basket with filter cartridge (2 pieces) for **miniUP**

© EHEIM, Germany

2006 Internal filter pickup 45

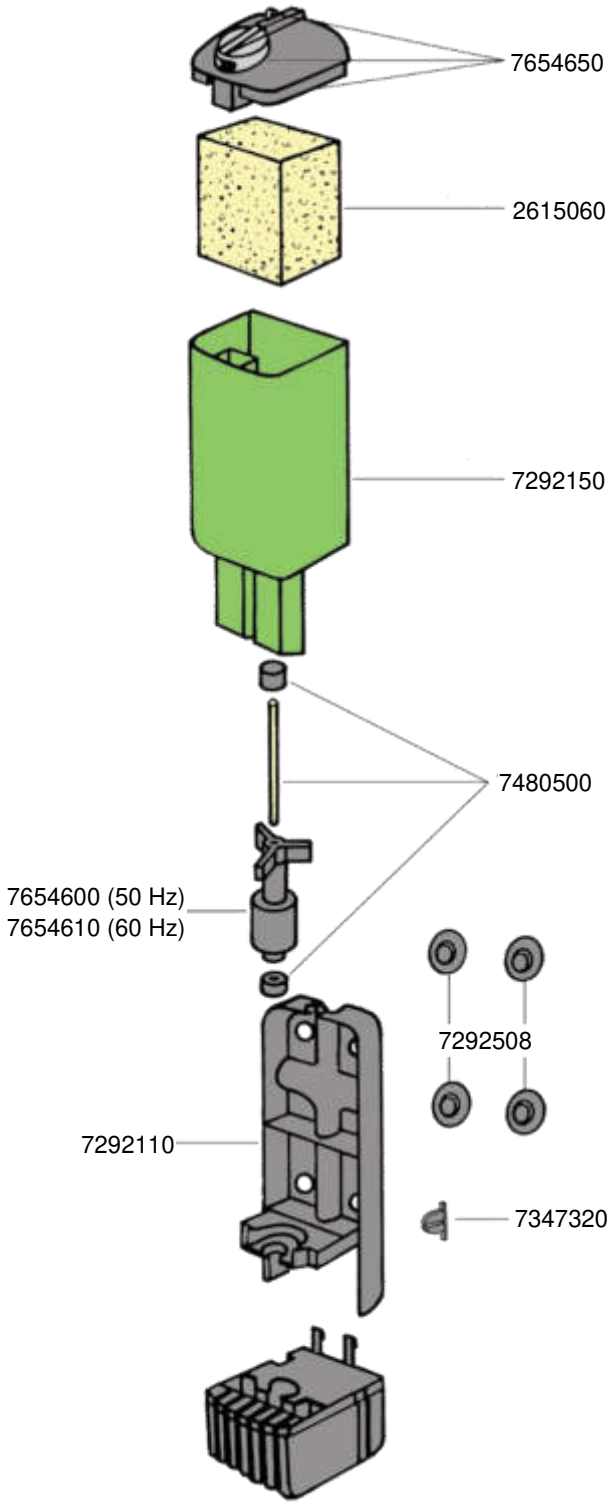

Order no.	Spare part
2615060	Filter cartridge (2 pieces)
7292508	Suction cup (4 pieces)
7292110	Back panel
7292150	Filter body
7347320	Locking piece (2 pieces)
7480500	Shaft with bushings
7654600	Impeller (50 Hz)
7654610	Impeller (60 Hz)
7654650	Filter body lid complete with jet and power regulator

© EHEIM, Germany

2008 Internal filter pickup 60
2010 Internal filter pickup 160
2012 Internal filter pickup 200

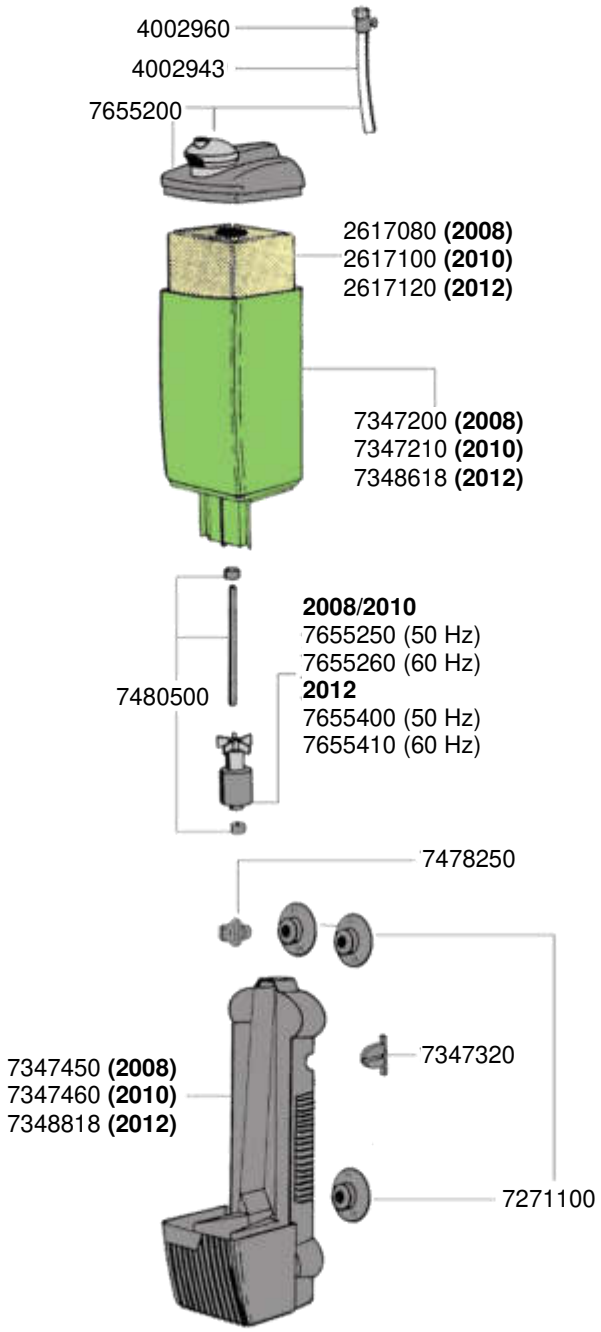

Order no.	Spare part
2617080	Filter cartridge (2 pieces) for **pickup** 60 (type 2008)
2617100	Filter cartridge (2 pieces) for **pickup** 160 (type 2010)
2617120	Filter cartridge (2 pieces) for **pickup** 200 (type 2012)
4002943	Hose ø 4/6 mm (3 m)
4002960	Air regulating clamp
7271100	Suction cup (4 pieces)
7347200	Filter body for **pickup** 60 (type 2008)
7347210	Filter body for **pickup** 160 (type 2010)
7347320	Locking piece (2 pieces)
7347450	Back panel without motor housing for **pickup** 60 (type 2008)
7347460	Back panel without motor housing for **pickup** 160 (type 2010)
7348618	Filter body for **pickup** 200 (type 2012)
7348818	Back panel without motor housing for **pickup** 200 (type 2012)
7478250	Attachment lug (4 pieces)
7480500	Shaft with bushings
7655200	Filter body lid complete with diffusor and regulating jet
7655250	Impeller (50 Hz) for **pickup** 60 and 160 (type 2008 and 2010)
7655260	Impeller (60 Hz) for **pickup** 60 and 160 (type 2008 and 2010)
7655400	Impeller (50 Hz) for **pickup** 200 (type 2012)
7655410	Impeller (60 Hz) for **pickup** 200 (type 2012)

© EHEIM, Germany

2206 Internal filter aqua 60
2207 Internal filter aqua 160
2208 Internal filter aqua 200

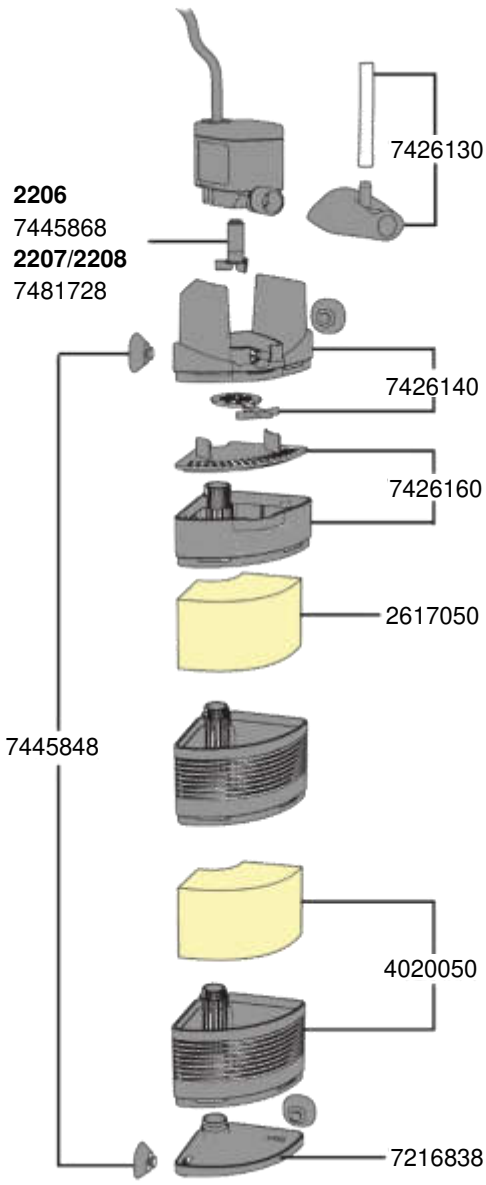

Order no.	Spare part
2617050	Filter cartridge (2 pieces)
4020050	Up-grade-kit: Filter basket with filter cartridge
7216838	Filter bottom
7445848	Suction cup (4 pieces)
7426130	Power diffuser with air hose
7426140	Pump housing with flow rate regulator
7426160	Media box with cover
7445868	Impeller (50Hz / 60 Hz) for **aqua60** type 2206
7481728	Impeller (50Hz / 60 Hz) for **aqua160** and **aqua200** type 2207 and 2208

© EHEIM, Germany

2048 Internal filter PowerLine 200

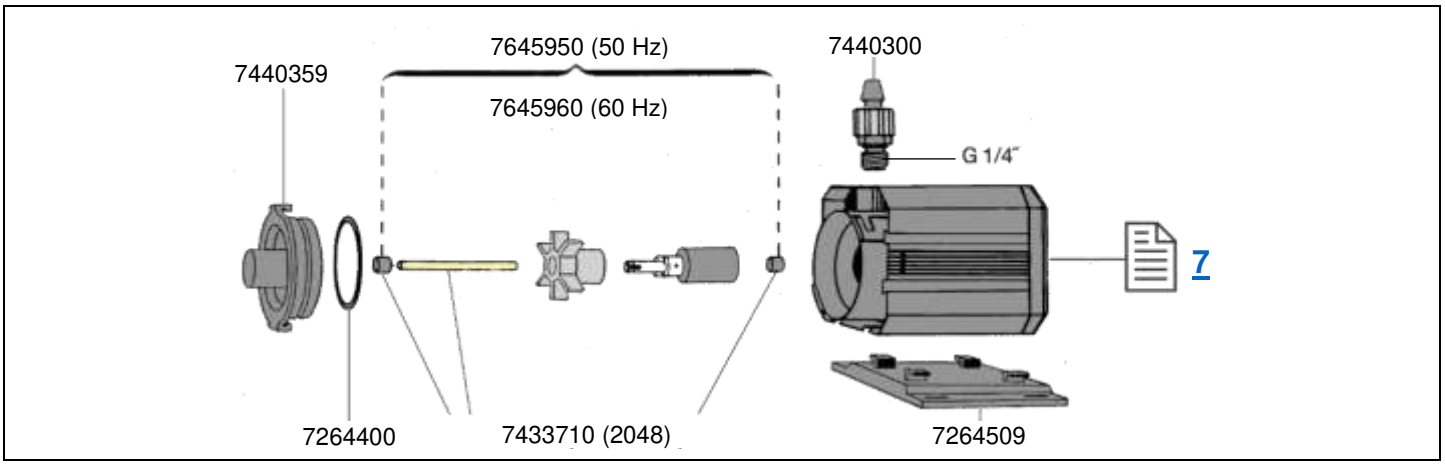

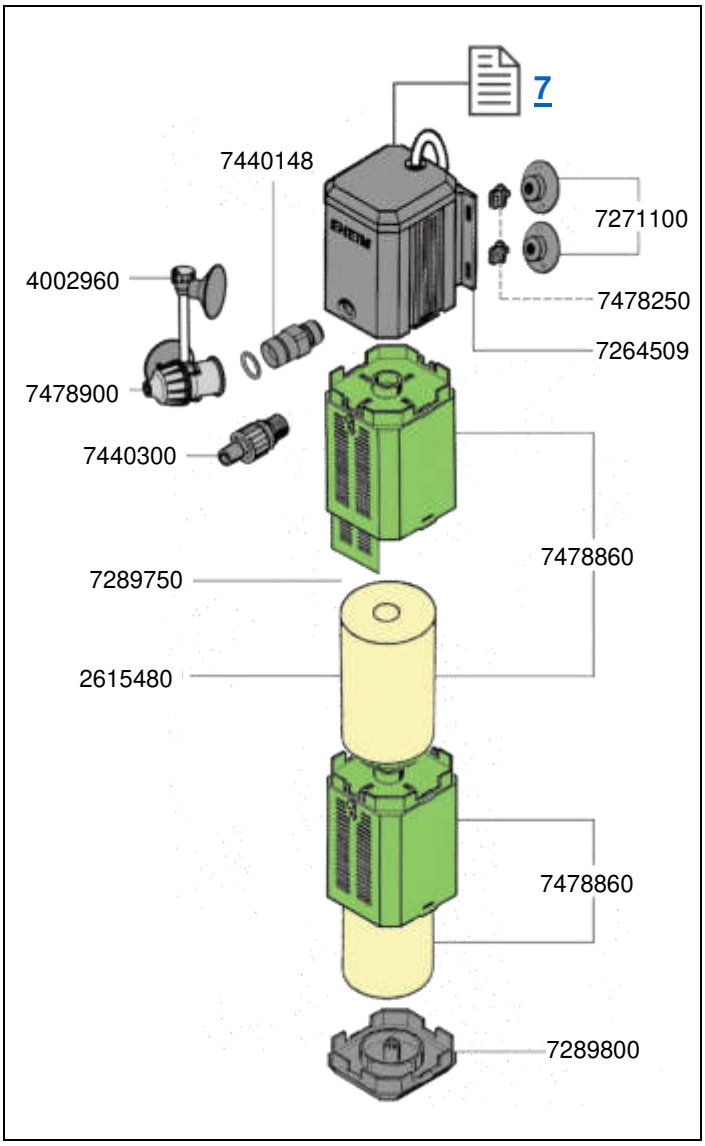

Order no.	Spare part
2615480	Filter cartridge (2 pieces)
4002960	Air regulating clamp for hose
7264400	Sealing ring (2 pieces)
7264509	Mounting plate
7271100	Suction cup (4 pieces)
7289750	Slide valve
7289800	Filter bottom
7433710	Shaft with bushings
7440148	Adapter for InstallationKIT
7440300	Threaded connector pressure side
7440359	Pump cover with bushing
7478250	Attachment lug (4 pieces)
7478860	Filter body with cartridge
7478900	Diffusor
7645950	Impeller (50 Hz) with shaft and bushings
7645960	Impeller (60 Hz) with shaft and bushings

© EHEIM, Germany

2252 Internal filter PowerLine XL

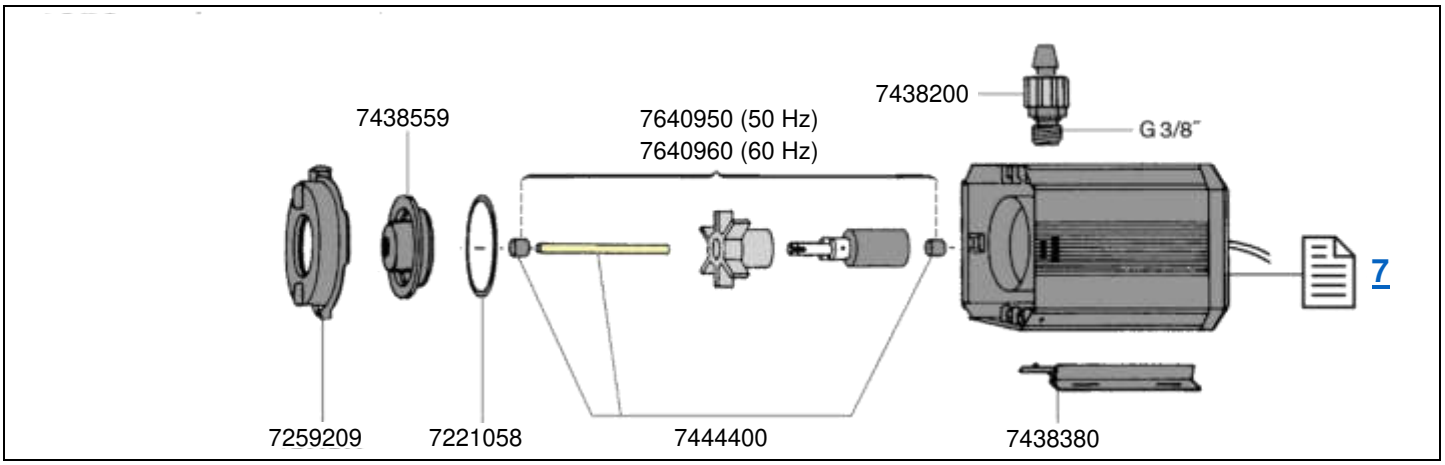

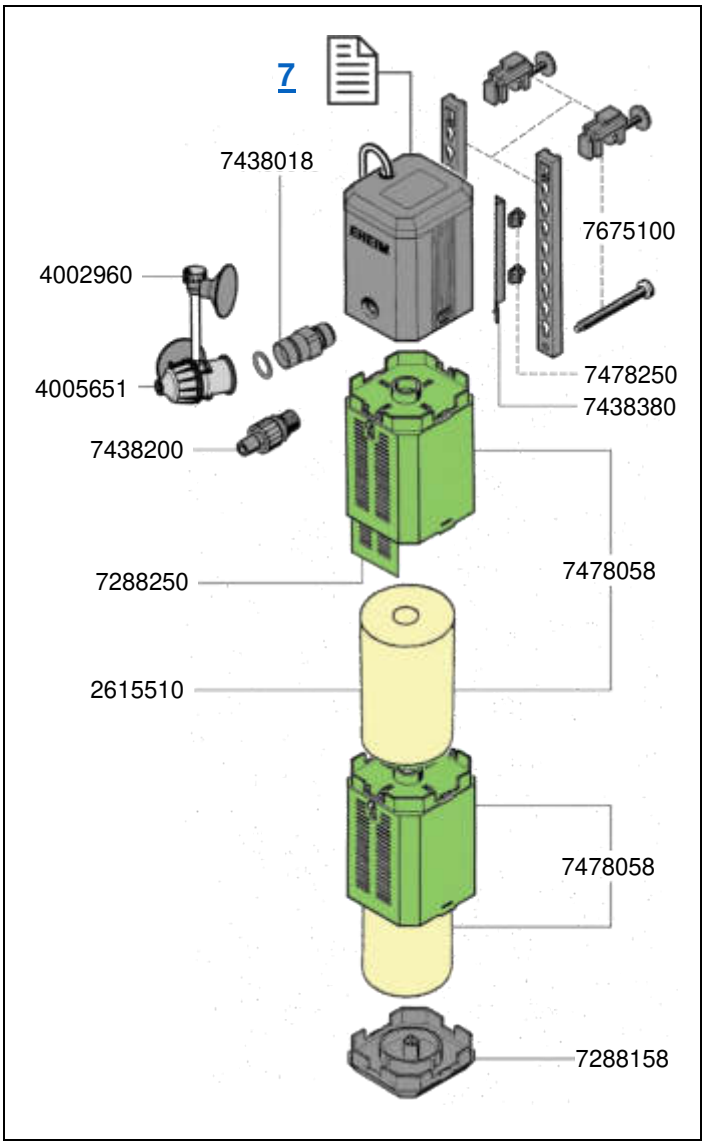

Order no.	Spare part
2615510	Filter cartridge (2 pieces)
4002960	Air regulating clamp for hose
4005651	Diffusor
7221058	Sealing ring (2 pieces)
7259209	Holding ring
7288158	Filter bottom
7288250	Slide valve
7438018	Adapter for InstallationKIT
7438200	Threaded connector pressure side
7438380	Attachment sleeve left and right and 2 panels
7438559	Pump cover
7444400	Shaft with bushings
7478058	Filter body with cartridge
7478250	Attachment lug (4 pieces)
7640950	Impeller (50 Hz) with shaft and bushings
7640960	Impeller (60 Hz) with shaft and bushings
7675100	Holding brackets

© EHEIM, Germany

1212 Powerhead 650

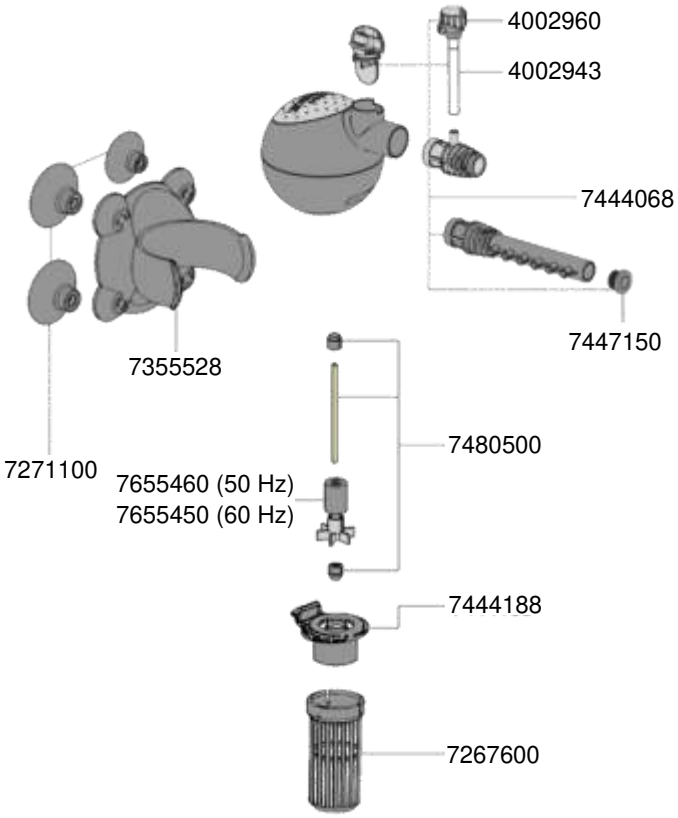

Order no.	Spare part
4002943	Hose ø 4/6 mm (3 m)
4002960	Air regulator
7267600	Inlet strainer
7271100	Suction cup (4 pieces)
7355528	Holder
7444068	Power regulator with diffusor and jet pipe
7444188	Pump cover with bushing
7447150	Set of pipe plugs
7480500	Shaft with bushings
7655460	Impeller (50 Hz)
7655450	Impeller (60 Hz)

© EHEIM, Germany

2400 Internal filter aquaball 45

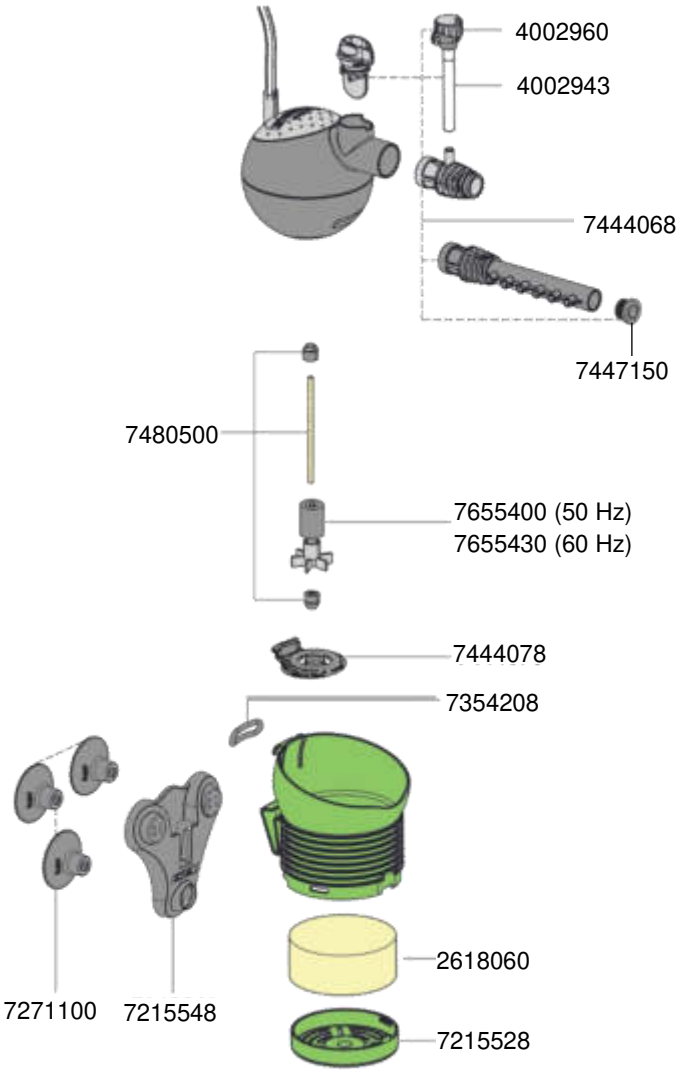

Order no.	Spare part
2618060	Filter cartridge (2 pieces)
4002943	Hose ø 4/6 mm (3 m)
4002960	Air regulator
4024000	Up-grade-kit: Filter basket with filter cartridge and media box with filter pad (not shown)
7215528	Filter bottom
7215548	Holder
7271100	Suction cup (4 pieces)
7354208	Tensioning ring (3 pieces)
7444068	Power regulator with diffuser and jet pipe
7444078	Pump cover with bushing
7447150	Set pipe plug
7480500	Shaft with bushings
7655400	Impeller (50 Hz)
7655430	Impeller (60 Hz)

© EHEIM, Germany

2401 Internal filter aquaball 60
2402 Internal filter aquaball 130
2403 Internal filter aquaball 180

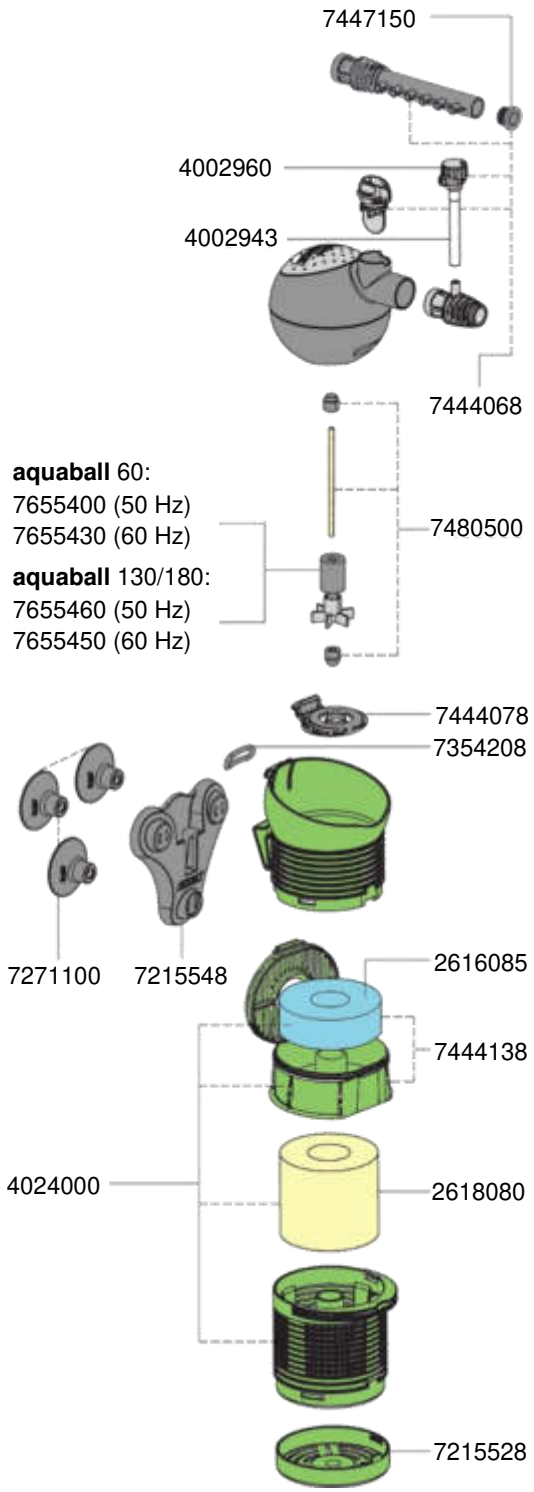

Order no.	Spare part
2616085	Filter pad for media box (2 pieces)
2618080	Filter cartridge (2 pieces)
4002943	Hose ø 4/6 mm (3 m)
4002960	Air regulator
4024000	Up-grade-kit: Filter basket with filter cartridge and media box with filter pad (not shown)
7215528	Filter bottom
7215548	Holder
7271100	Suction cups (4 pieces)
7354208	Tensioning ring (3 pieces)
7444068	Power regulator with diffuser and jet pipe
7444078	Pump cover with bushing
7444138	Media box with filter pad
7447150	Set pipe plug
7480500	Shaft with bushings
7655400	Impeller (50 Hz) for **aquaball** 60 (type 2401)
7655430	Impeller (60 Hz) for **aquaball** 60 (type 2401)
7655450	Impeller (60 Hz) for **aquaball** 130 and 180 (type 2402 and 2403)
7655460	Impeller (50 Hz) for **aquaball** 130 and 180 (type 2402 and 2403)

© EHEIM, Germany

2411 Internal filter biopower 160
2412 Internal filter biopower 200
2413 Internal filter biopower 240

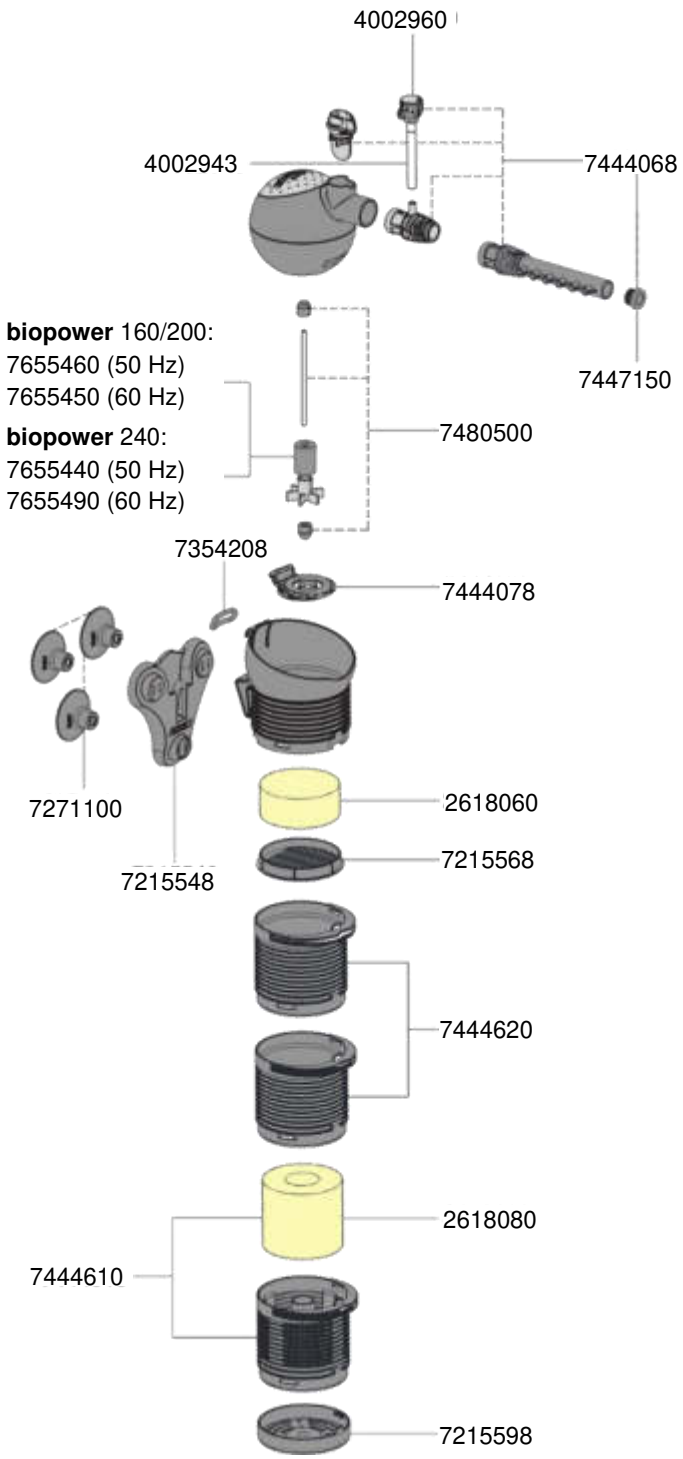

Order no.	Spare part
2618060	Fine filter cartridge (2 pieces)
2618080	Prefilter cartridge (2 pieces)
4002943	Hose ø 4/6 mm (3 m)
4002960	Air regulator
7215548	Holder
7215568	Cover grate
7215598	Filter bottom
7271100	Suction cup (4 pieces)
7354208	Tensioning ring (3 pieces)
7444068	Power regulator with diffuser and jet pipe
7444078	Pump cover with bushing
7444610	Prefilter with filter cartridge
7444620	Filter canister
7447150	Set pipe plug
7480500	Shaft with bushings
7655440	Impeller (50 Hz) for **biopower** 240 (type 2413)
7655450	Impeller (60 Hz) for **biopower** 160 and 200 (type 2411 and 2412)
7655460	Impeller (50 Hz) for **biopower** 160 and 200 (type 2411 and 2412)
7655490	Impeller (60 Hz) for **biopower** 240 (type 2413)

© EHEIM, Germany

2040 External filter LiBERTY 75
2041 External filter LiBERTY 130
2042 External filter LiBERTY 200

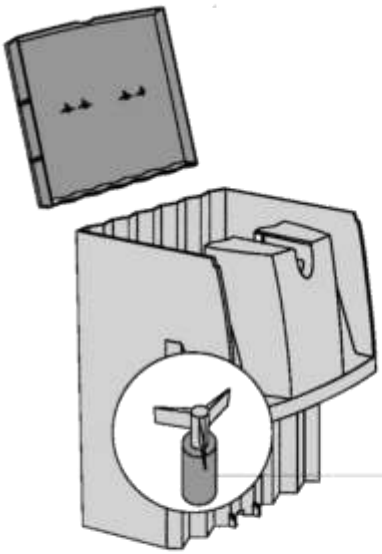

LiBERTY 75:
7600468 (50 Hz)
7600158 (60 Hz)

LiBERTY 130:
7600478 (50 Hz)
7600168 (60 Hz)

LiBERTY 200:
7600488 (50 Hz)
7600178 (60 Hz)

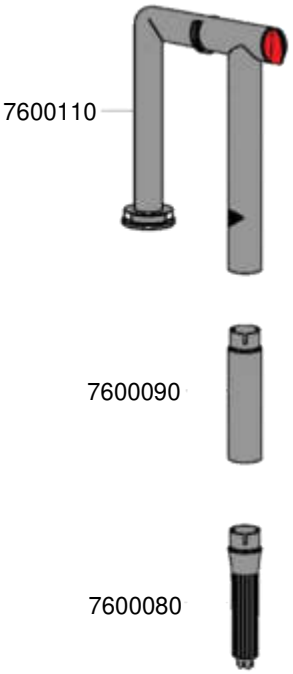

Order no.	Spare part
2617401	Bio foam cartridge (2 pieces)
2617411	Bio foam cartridge large
2617421	SUBSTRAT pro cartridge with prefilter
2628401	3D active carbon insert (2 pieces)
2628411	3D active carbon insert (12 pieces)
7600080	Inlet strainer
7600090	Extension for suction tube (2 pieces)
7600110	Suction tube
7600158	Impeller (60 Hz) for **LiBERTY** 75 (type 2040)
7600168	Impeller (60 Hz) for **LiBERTY** 130 (type 2041)
7600178	Impeller (60 Hz) for **LiBERTY** 200 (type 2042)
7600468	Impeller (50 Hz) for **LiBERTY** 75 (type 2040)
7600478	Impeller (50 Hz) for **LiBERTY** 130 (type 2041)
7600488	Impeller (50 Hz) for **LiBERTY** 200 (type 2042)

© EHEIM, Germany

2004 External filter aquacompact 40
2005 External filter aquacompact 60

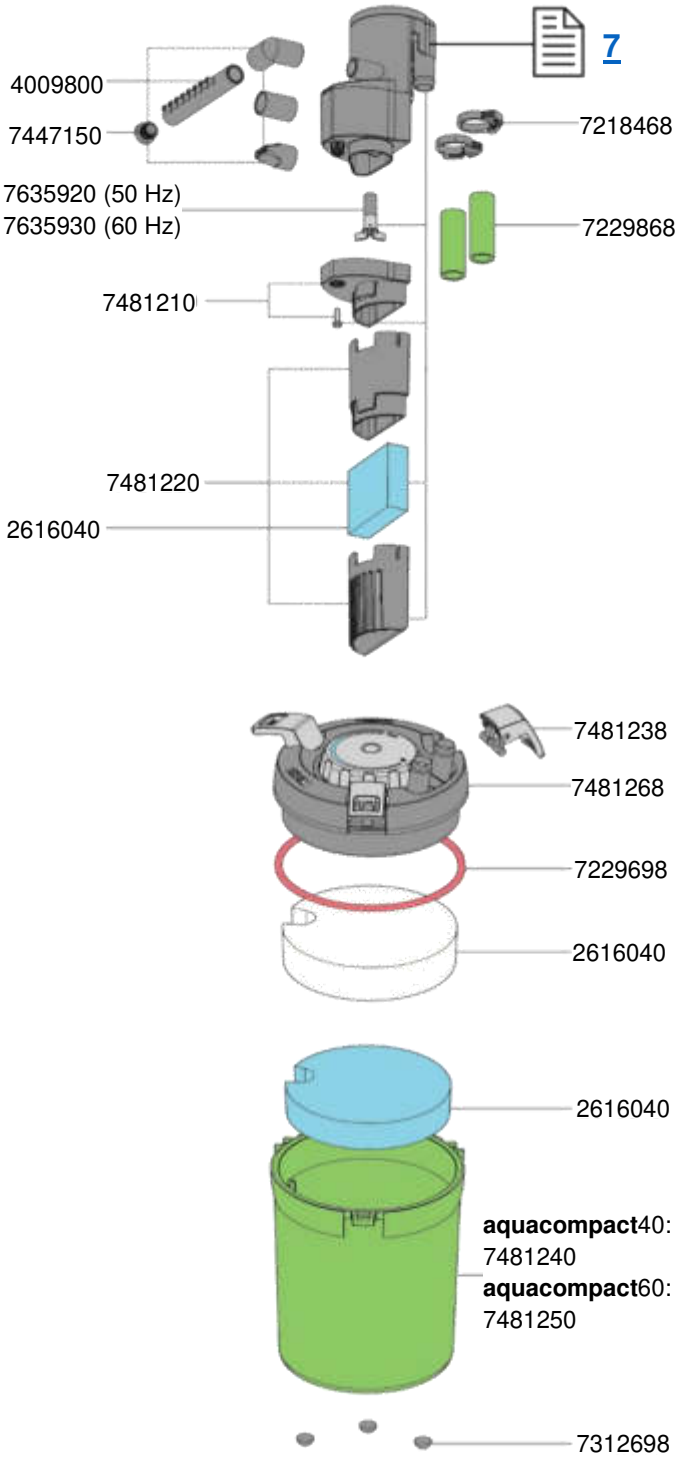

Order no.	Spare part
2616040	Set of filter pads (2x blue, 3x white) for **aquacompact**40 and 60 (type 2004 and 2005)
4009800	Nozzle set, consisting of: jet nozzle, lower elbow connector, sleeve, wide jet outlet nozzle, outlet jet pipe, pipe plug
7218468	Hose clamp (2 pieces)
7229698	Sealing ring
7229868	Silicon hose Ø 12/16 mm (2x 25 cm)
7312698	Rubber feet (4 pieces)
7447150	Set of pipe plugs
7481210	Pump cover with screw
7481220	Extension with inlet strainer
7481238	Fastening clip (3 pieces)
7481240	Filtermedia container for **aquacompact**40 (type 2004)
7481250	Filtermedia container for **aquacompact**60 (type 2005)
7481268	Filter container head
7635920	Impeller (50 Hz)
7635930	Impeller (60 Hz)

© EHEIM, Germany

2211 External filter classic 150

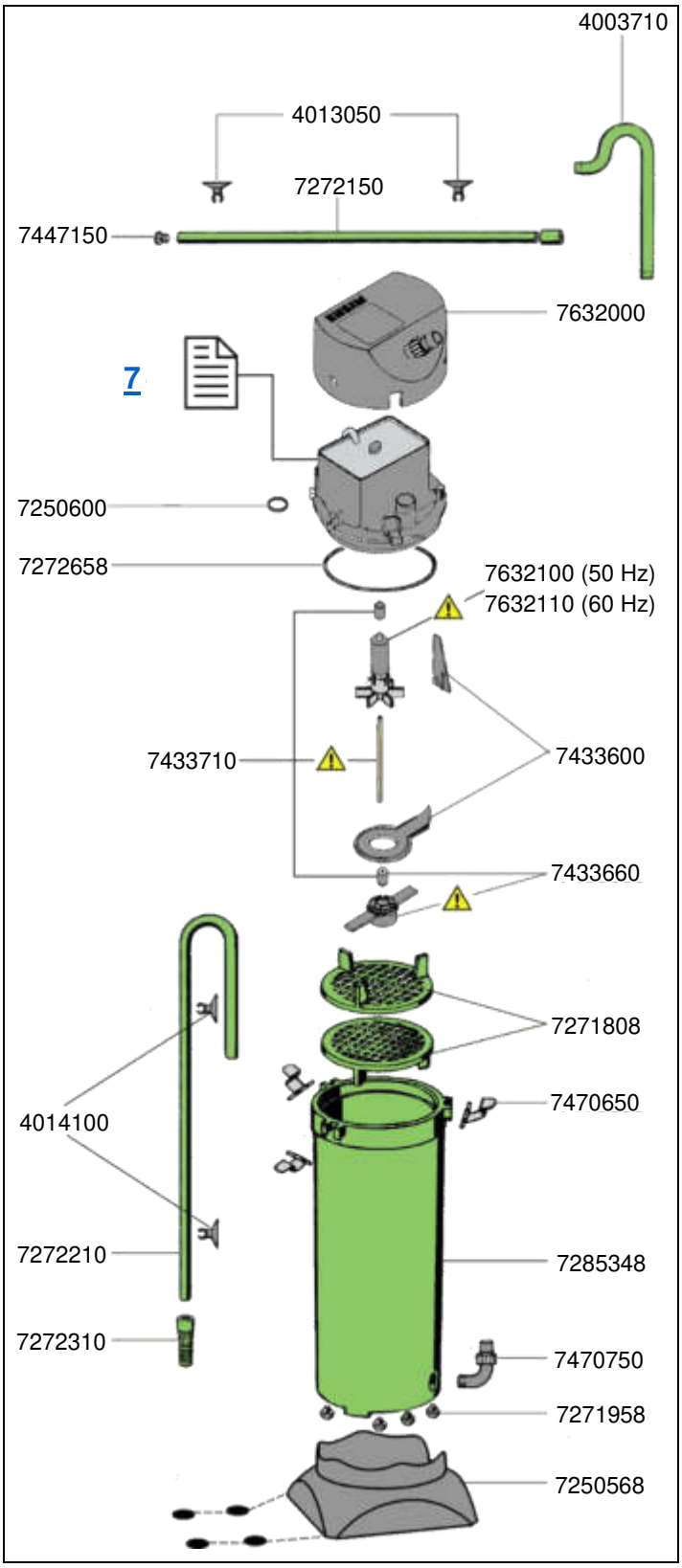

Order no.	Spare part
4003710	Outlet pipe
4003943	Hose pressure side Ø 9/12 mm, 3 m (not shown)
4004943	Hose suction side Ø 12/16 mm, 3 m (not shown)
4013050	Suction cup with clip Ø 10 mm (2 pieces)
4014100	Suction cup with clip Ø 13 mm (2 pieces)
7250568	Support
7250600	Sealing ring for cover (2 pieces)
7271808	Lattice screen
7271958	Rubber feet (5 pieces)
7272150	Outlet jet pipe
7272210	Intake pipe
7272310	Inlet strainer
7272658	Sealing ring for pump head
7285348	Canister
7400008	Filter bag (not shown)
7433600	Pump cover with insert
7433660	**Securing piece with bushing (for 1211, 1213 and 1713) For 1011, 1013 and 1513 only suitable in conjunction with item 7433710**
7433710	**Ceramic shaft with bushings (for 1211, 1213 and 1713) For 1011, 1013 and 1513 only in conjunction with item 7433660**
7447150	Set of pipe plugs
7470650	Spring clip (4 pieces)
7470750	Threaded connector
7632000	Cover
7632100	**Impeller (50 Hz) for 1011, 1013 and 1513 only suitable in conjunction with item 7433660 and 7433710**
7632110	**Impeller (60 Hz) for 1011, 1013 and 1513 only suitable in conjunction with item 7433660 and 7433710**

© EHEIM, Germany

2213 External filter classic 250

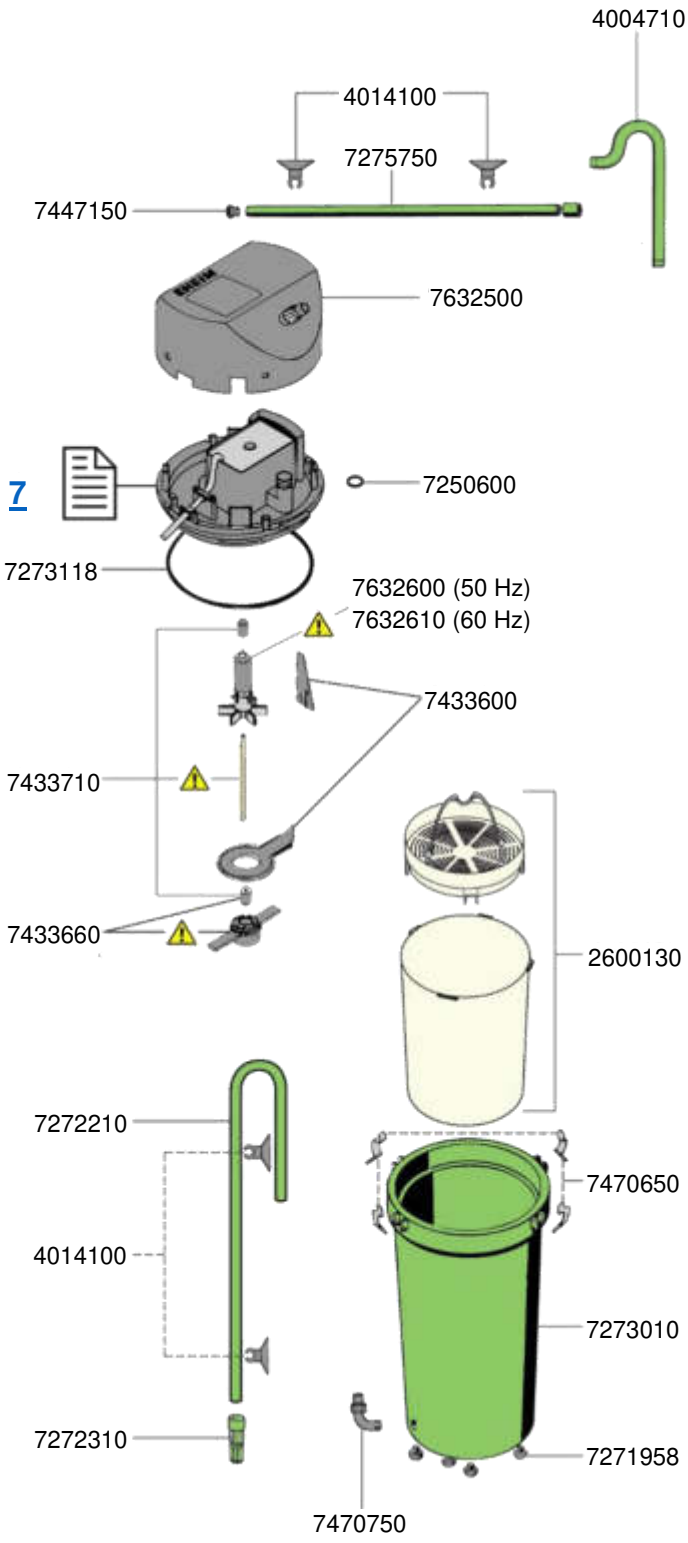

Order no.	Spare part
2600130	Filter media container **(not for 2313)**
4004710	Outlet pipe
4004943	Hose pressure and suction side Ø 12/16 mm, 3 m (not shown)
4014100	Suction cup with clip Ø 13 mm (2 pieces)
7250600	Sealing ring for cover (2 pieces)
7271958	Rubber feet (5 pieces)
7272210	Intake pipe
7272310	Inlet strainer
7273010	Canister
7273050	Lattice screen **(for 2213 without filter media container)**
7273118	Sealing ring for pump head
7275750	Outlet jet pipe
7400008	Filter bag (not shown)
7433600	Pump cover with insert
7433660	**Securing piece with bushing (for 1211, 1213 and 1713) For 1011, 1013 and 1513 only suitable in conjunction with item 7433710**
7433710	**Ceramic shaft with bushings (for 1211, 1213 and 1713) For 1011, 1013 and 1513 only suitable in conjunction with item 7433660**
7447150	Set of pipe plugs
7470650	Spring clip (4 pieces)
7470750	Threaded connector
7632500	Cover
7632600	**Impeller (50 Hz) for 1011, 1013 and 1513 only suitable in conjunction with item 7433660 and 7433710**
7632610	**Impeller (60 Hz) for 1011, 1013 and 1513 only suitable in conjunction with item 7433660 and 7433710**

© EHEIM, Germany

2215 External filter classic 350

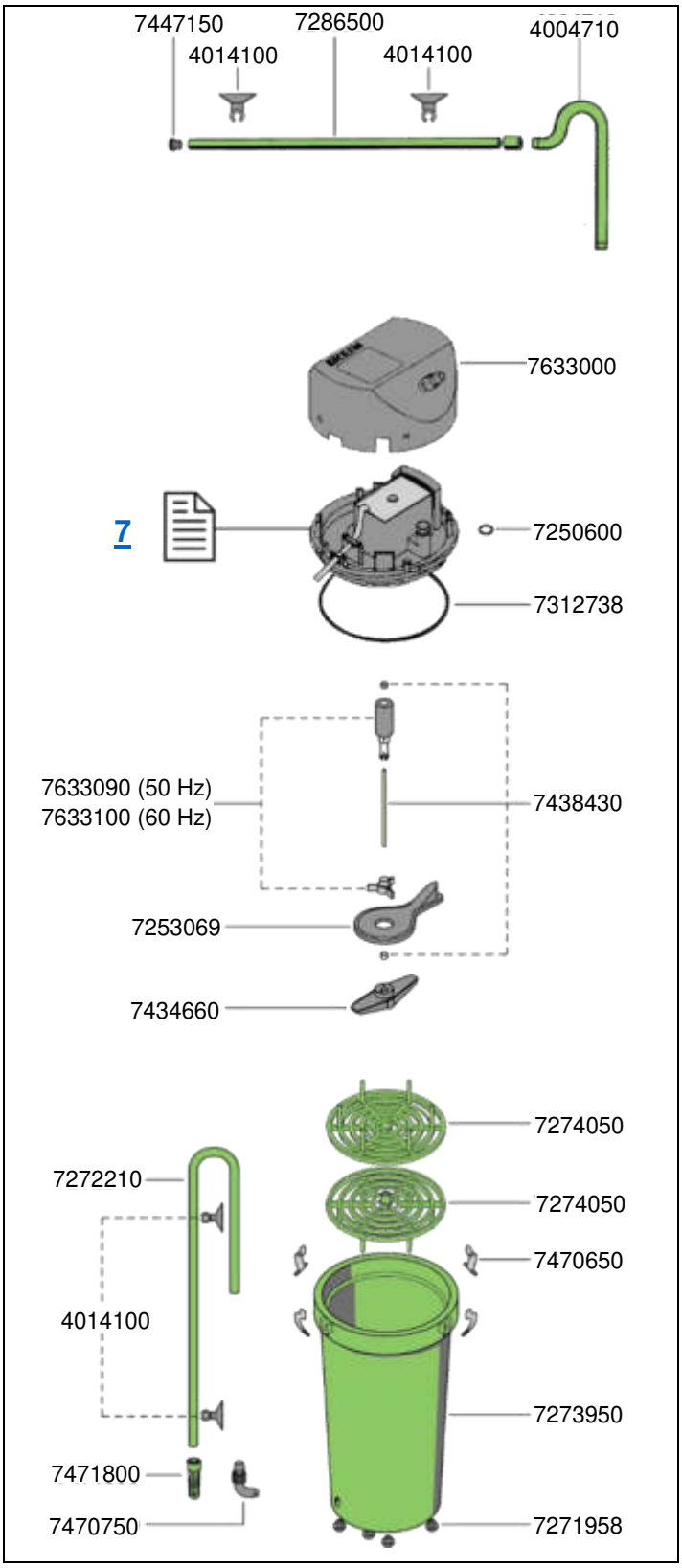

Ord.-no.	Spare part
4004710	Outlet pipe
4004943	Hose pressure and suction side Ø 12/16 mm, 3 m (not shown)
4014100	Suction cup with clip Ø 13 mm (2 pieces)
7250600	Sealing ring for cover (2 pieces)
7253069	Pump cover
7271958	Rubber feet (5 pieces)
7272210	Intake pipe
7273950	Canister
7274050	Lattice screen
7286500	Outlet jet pipe
7312738	Sealing ring for pump head
7400008	Filter bag (not shown)
7434660	Securing piece with bushing
7438430	Ceramic shaft with bushings
7447150	Set of pipe plugs
7470650	Spring clip (4 pieces)
7470750	Threaded connector
7471800	Inlet strainer
7633000	Cover
7633090	Impeller (50 Hz) – from series 88011
7633100	Impeller (60 Hz) – from series 88011

© EHEIM, Germany

2217 External filter classic 600

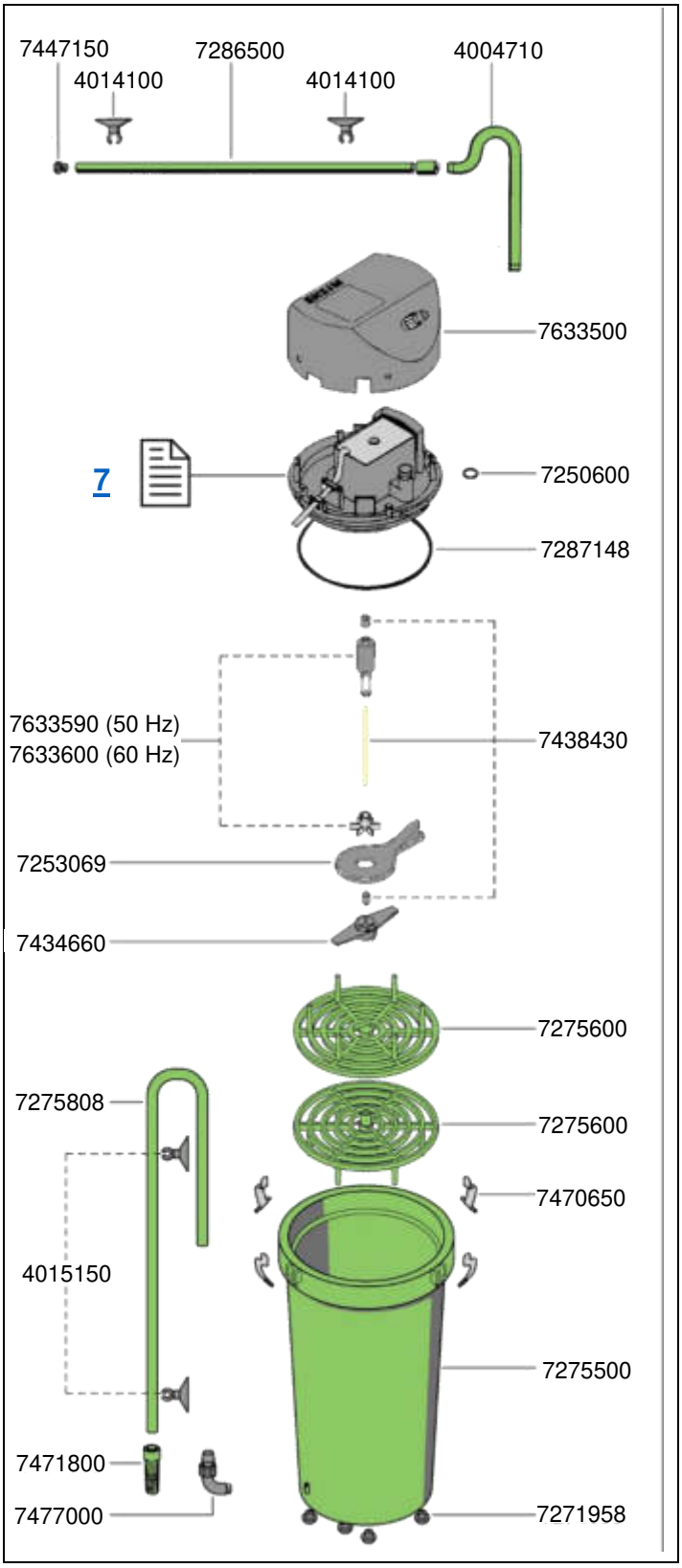

Ord.-no.	Spare part
4004710	Outlet pipe
4004943	Hose pressure side Ø 12/16 mm, 3 m (not shown)
4005943	Hose suction side Ø 16/22 mm, 3 m (not shown)
4014100	Suction cup with clip Ø 13 mm (2 pieces)
4015150	Suction cup with clip Ø 17 mm (2 pieces)
7250600	Sealing ring for cover (2 pieces)
7253069	Pump cover
7271958	Rubber feet (5 pieces)
7275500	Canister
7275600	Lattice screen
7275808	Intake pipe
7286500	Outlet jet pipe
7287148	Sealing ring for pump head
7400008	Filter bag (not shown)
7434660	Securing piece with bushing
7438430	Ceramic shaft with bushings
7447150	Set of pipe plugs
7470650	Spring clip (4 pieces)
7471800	Inlet strainer
7477000	Threaded connector
7633500	Cover
7633590	Impeller (50 Hz) – from series 88011
7633600	Impeller (60 Hz) – from series 88011

© EHEIM, Germany

2260 External filter classic 1500XL

EHEIM classic 1500XL

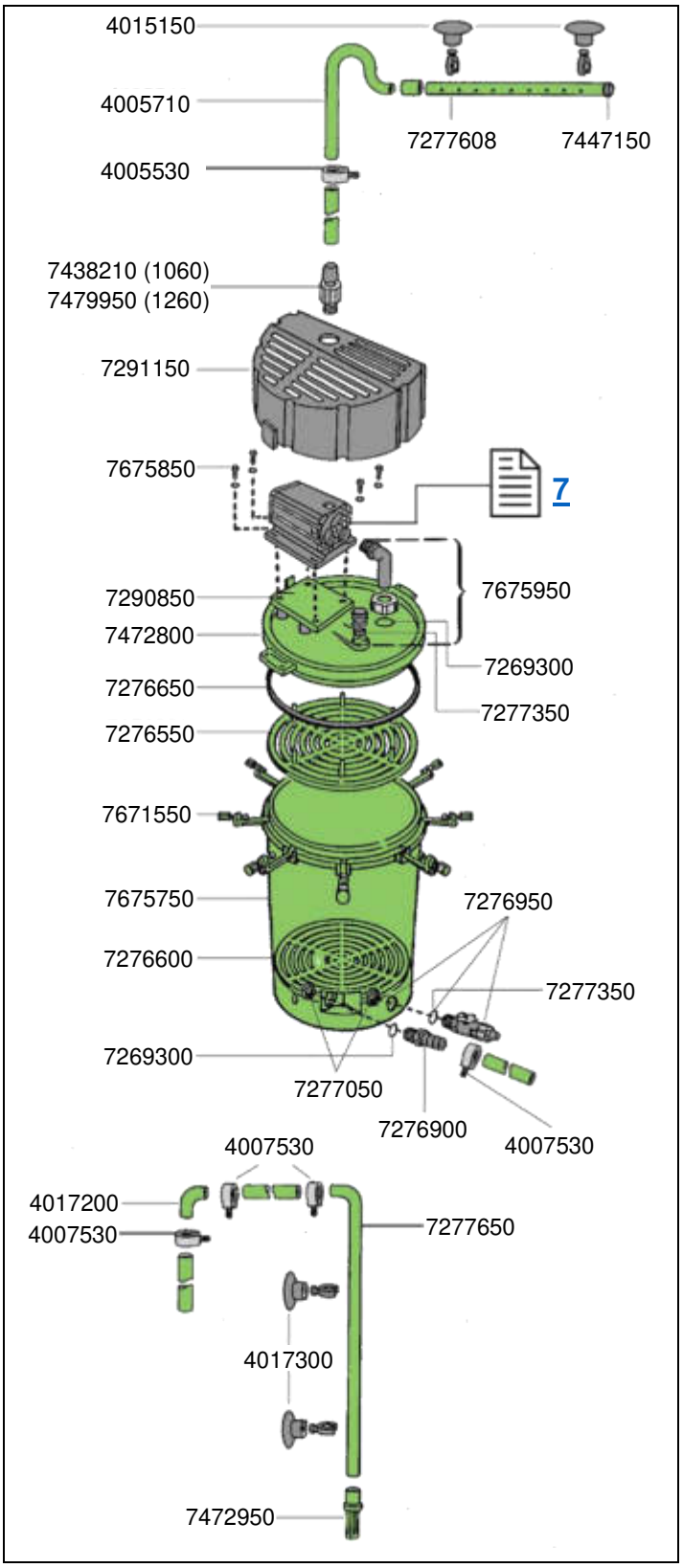

Order no.	Spare part
4005530	Hose clamp (2 pieces)
4005710	Outlet pipe
4005943	Hose pressure side Ø 16/22 mm (3 m)
4007530	Hose clamp (2 pieces)
4007940	Hose suction side Ø 25/34 mm (p.m.)
4015150	Suction cup with clip
4017200	Elbow connector
4017300	Suction cup with clip
7269300	Sealing ring
7276550	Top lattice screen
7276600	Lower lattice screen
7276650	Sealing ring
7276900	Threaded connector
7276950	Canister drain tap with plastic nut and sealing ring
7277050	Plastic nut (2 pieces)
7277350	Sealing ring
7277608	Outlet jet pipe
7277650	Intake pipe
7290850	Base plate
7291150	Cover
7438210	Threaded connector press. for 1060
7447150	Set pipe plugs
7472800	Canister lid
7472900	Filter bag (not shown)
7472950	Inlet strainer
7479950	Threaded connector press. 1260
7671550	Lid securing clamp
7675750	Canister with lid securing clamp
7675850	Attachment set complete
7675950	Suction elbow set

© EHEIM, Germany

2032 External filter eccopro 130
2034 External filter eccopro 200
2036 External filter eccopro 300

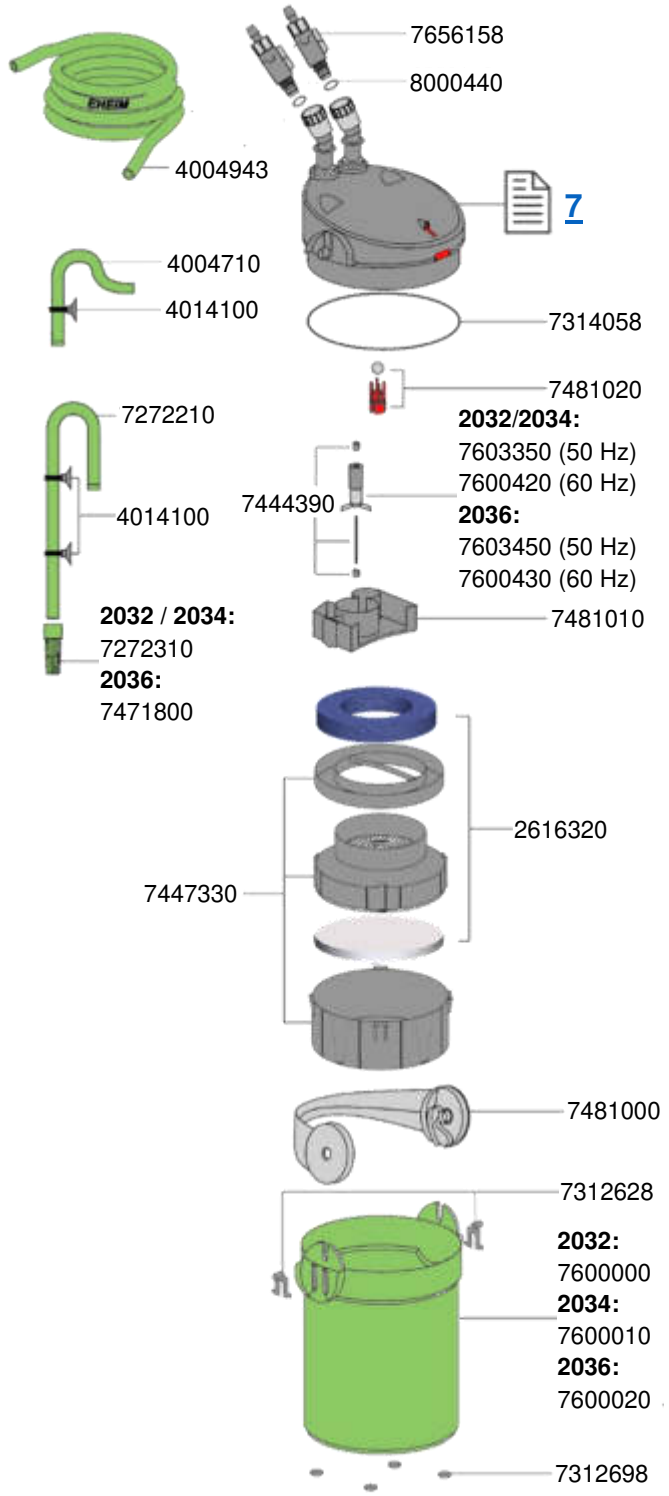

Order no.	Spare part
2616320	Set Prefilter pad (1 x) and fine filter pads (4 pieces)
2628310	Carbon filter pad (3 pieces) not shown
4004943	Hose suction and pressure side ø 12/16 mm (3 m)
4004710	Outlet pipe
4014100	Suction cup with clip (2 pieces)
7272210	Intake pipe
7272310	Inlet strainer for **eccopro**130/200 (type 2032 and 2034)
7312628	Handle connector (2 pieces)
7312698	Rubber feet (4 pieces)
7314058	Sealing ring with special coating
7444390	**High Performance Ceramic** shaft with bushings
7447330	Prefilter with filter media container and cover
7471800	Inlet strainer for **eccopro**300 (type 2036)
7481000	Multi-function lever
7481010	Pump chamber with bushing
7481020	Ball with ball cage
7600000	Filter canister for **eccopro**130 (type 2032)
7600010	Filter canister for **eccopro**200 (type 2034)
7600020	Filter canister for **eccopro**300 (type 2036)
7600420	Impeller (60 Hz) for **eccopro**130/200 (type 2032 and 2034)
7600430	Impeller (60 Hz) for **eccopro**300 (type 2036)
7603350	Impeller (50 Hz) for **eccopro**130/200 (type 2032 and 2034)
7603450	Impeller (50 Hz) for **eccopro**300 (type 2036)
7656158	Shut-off tap
8000440	Set Sealing ring for shut-off tap

© EHEIM, Germany

2231 / 2233 External filter ecco
2232 / 2234 External filter ecco
2235 / 2236 External filter ecco

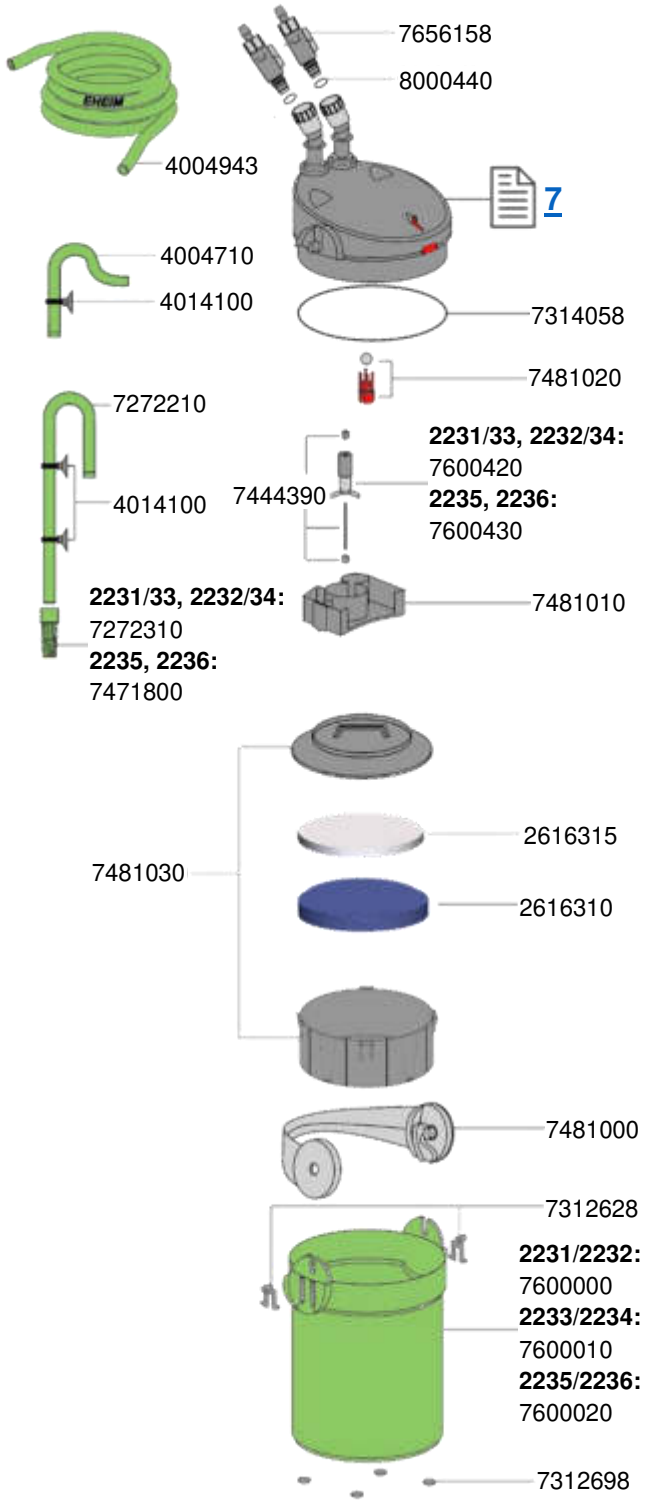

Order no.	Spare part
2616310	Coarse filter pad (3 pieces)
2616315	Fine filter pad (3 pieces)
2628310	Carbon filter pad (3 pieces) not shown
4004943	Hose suction and pressure side ø 12/16 mm (3 m)
4004710	Outlet pipe
4014100	Suction cup with clip (2 pieces)
7272210	Intake pipe
7272310	Inlet strainer for type 2231 / 2233 and 2232 / 2234
7312628	Handle connector (2 pieces)
7312698	Rubber feet (4 pieces)
7314058	Sealing ring with special coating
7444390	**High Performance Ceramic** shaft with bushings
7471800	Inlet strainer for type 2235 and 2236
7481000	Multi-function lever
7481010	Pump chamber with bushing
7481020	Ball with ball cage
7481030	Filter container with cover
7600000	Filter canister for type 2231 and 2232
7600010	Filter canister for type 2233 and 2234
7600020	Filter canister for type 2235 and 2236
7600420	Impeller (50 and 60 Hz) for type 2231 / 2233 and 2232 / 2234
7600430	Impeller (50 and 60 Hz) for type 2235 and 2236
7656158	Shut-off tap
8000440	Set Sealing ring for shut-off tap

© EHEIM, Germany

2422 External filter eXperience 150
2424 External filter eXperience 250
2124 Thermofilter eXperience 250T

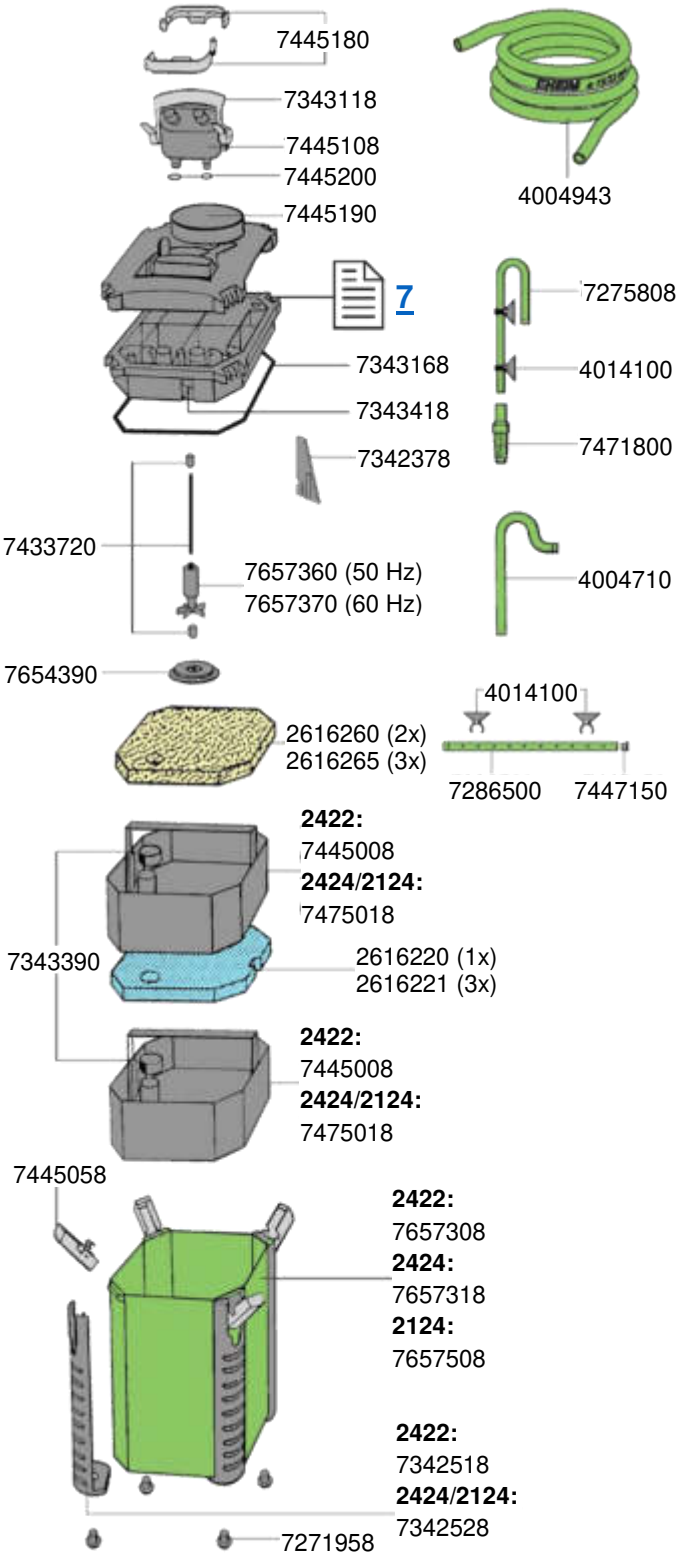

Order no.	Spare part
2616220	Set of filter pads (1x blue, 2x white)
2616221	Coarse filter pads (3 pieces)
2616225	Set fine filter pads (3 pieces)
4004710	Outlet pipe
4004943	Hose pressure side and suction side Ø 16/22 mm (3 m)
4014100	Suction cup with clip (2 pieces)
7271958	Rubber feet (5 pieces)
7272210	Intake pipe
7286500	Outlet jet pipe
7342378	Insert
7342518	Side protection for type 2422
7342528	Side protection for type 2422/2124
7343118	Locking clamp for adapter
7343168	Sealing gasket
7343390	Rubber seals (3 pieces)
7343418	Cleaning plug for pump head
7433720	Ceramic shaft with bushings
7445008	Filter media container for type 2422
7445018	Filter media container for type 2424/2124
7445058	Verschlussklipp komplett
7445108	Adapter complete
7445180	Hose clamp
7445190	Pump cover
7445200	Set of sealing rings for adapter
7447150	Set of pipe plugs
7471800	Inlet strainer
7657308	Filter canister with side protection and rubber feet for type 2422
7657318	Filter canister with side protection and rubber feet for type 2424
7657360	Impeller (50 Hz)
7657370	Impeller (60 Hz)
7657390	Pump cover with bushing
7657508	Filter canister with side protection rubber feet and heater 230 V/50 Hz Schuko for type 2124 **only for freshwater**

© EHEIM, Germany

2426 External filter eXperience 350

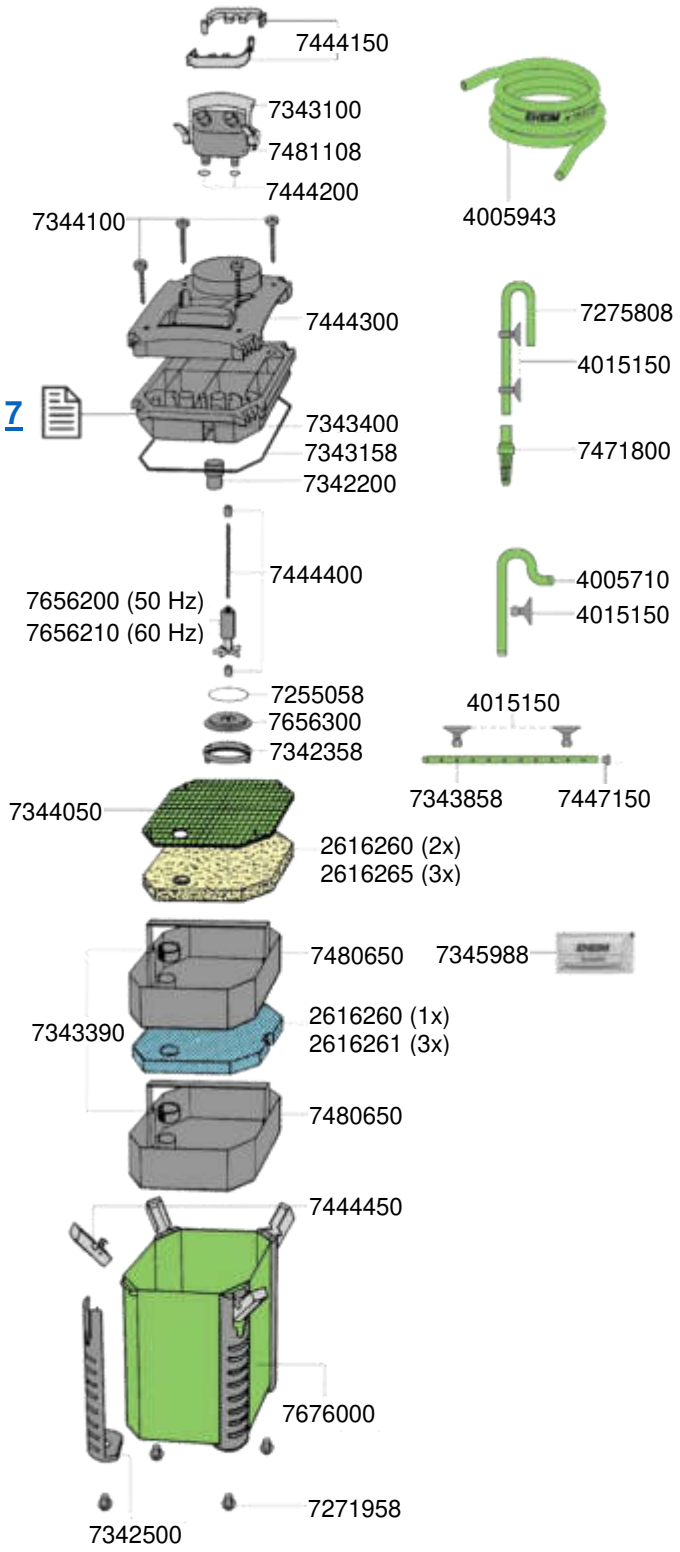

Order no.	Spare part
2616260	Set of filter pads (1x blue, 2x white)
2616261	Coarse filter pads (3 pieces)
2616265	Set fine filter pads (3 pieces)
4005710	Outlet pipe
4005943	Hose pressure side and suction side Ø 16/22 mm (3 m)
4015150	Suction cup with clip (2 pieces)
7255058	Sealing ring
7271958	Rubber feet (5 pieces)
7275808	Intake pipe
7342200	Input connector
7342358	Locking ring
7342500	Side protection
7343100	Locking clamp for adapter
7343158	Sealing gasket
7343390	Rubber seals (3 pieces)
7343400	Cleaning plug for pump head
7343858	Outlet jet pipe
7344050	Lattice screen
7344100	Screws (4 pieces)
7345988	Vaseline
7444150	Hose clamp
7444200	Set of sealing rings for adapter
7444300	Pump cover
7444400	Ceramic shaft with bushings
7444450	EZ clips
7447150	Set of pipe plugs
7471800	Inlet strainer
7480650	Filter media container
7481108	Adapter complete
7656200	Impeller (50 Hz)
7656210	Impeller (60 Hz)
7656300	Pump cover with sealing and bushing
7676000	Filter canister with side protection and rubber feet

© EHEIM, Germany

2071 External filter *professionel 3* 250
2073 External filter *professionel 3* 350
2075 External filter *professionel 3* 600
2171 Thermofilter *professionel 3* 250T
2173 Thermofilter *professionel 3* 350T

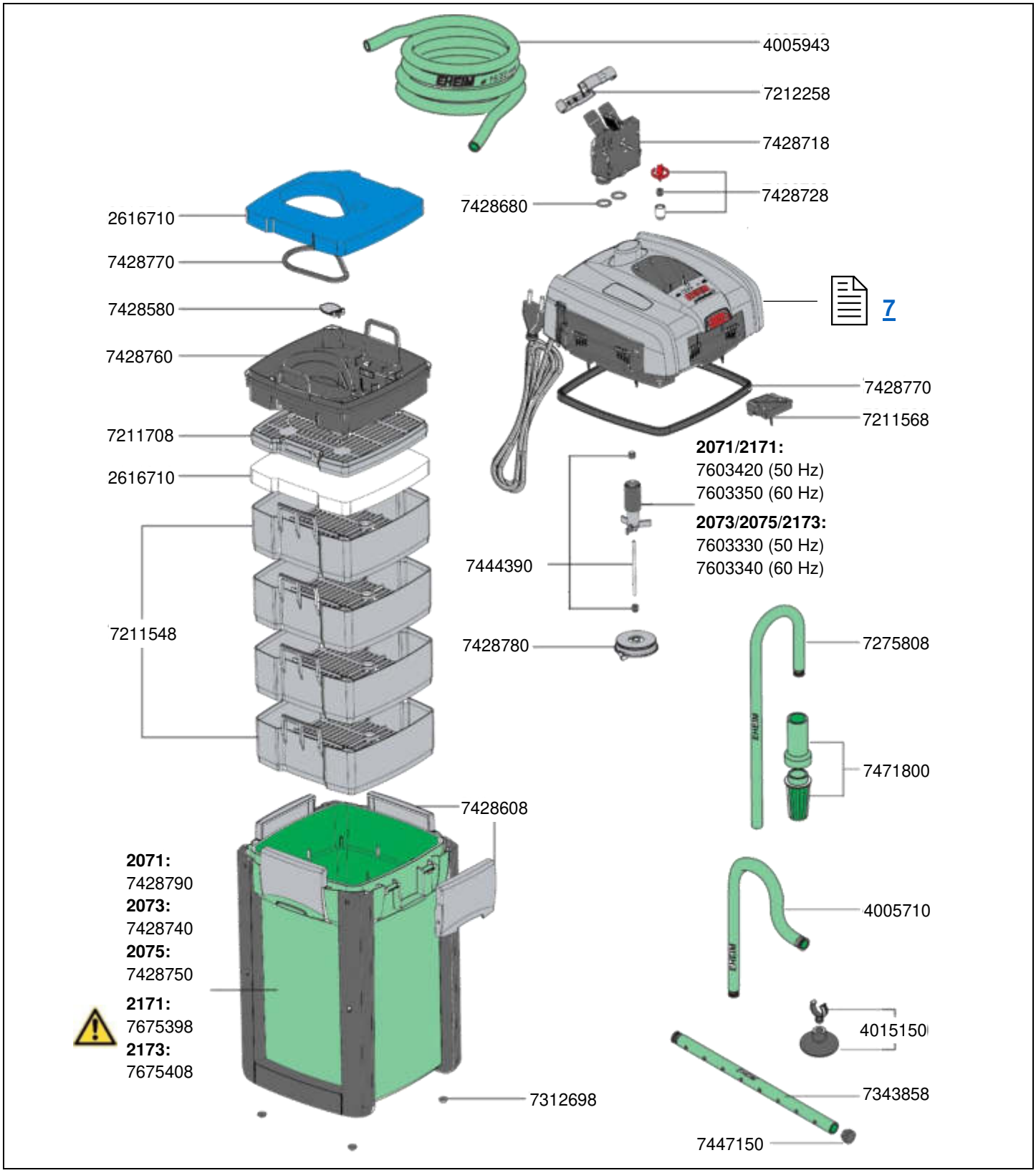

© EHEIM, Germany

2071 External filter *professionel 3* 250
2073 External filter *professionel 3* 350
2075 External filter *professionel 3* 600
2171 Thermofilter *professionel 3* 250T
2173 Thermofilter *professionel 3* 350T

Order no.	Spare part
2616710	Set prefilter pad blue (1x) and fine filter pads white (4x)
4005710	Outlet pipe green for hose Ø 16/22 mm
4005943	Hose suction and pressure side Ø 16/22 mm (3 m) green
4015150	Suction cup with clip (2 pieces)
7211548	Filter media container
7211568	Locking device
7211708	Lattice screen
7212258	Hose clamp complete
7275808	Intake pipe green for hose Ø 16/22 mm
7312698	Rubber feet (4 pieces)
7343858	Outlet jet pipe green for hose Ø 16/22 mm
7428580	Valve with holder
7428608	EZ clip complete
7428680	Set of sealing rings for safety adapter
7428718	Safety adapter with locking lever
7428728	Floater complete
7428740	Filter canister green with side protection for ***professionel 3e 350*** (type 2073)
7428750	Filter canister green with side protection for ***professionel 3 600*** (type 2075)

Order no.	Spare part
7428760	Prefilter
7428770	Set sealing ring for canister
7428780	Pump cover
7428790	Filter canister green with side protection for ***professionel 3 250*** (type 2071)
7444390	**High Performance Ceramic** shaft with bushings
7447150	Set of pipe plugs
7471800	Inlet strainer green
7603330	Impeller 50 Hz for ***professionel 3 350, 600*** and ***350T*** (type 2073, 2075 and 2173)
7603340	Impeller 60 Hz for ***professionel 3 350, 600*** and ***350T*** (type 2073, 2075 and 2173)
7603350	Impeller 60 Hz for ***professionel 3 250*** and ***250T*** (type 2071 and 2171)
7603420	Impeller 50 Hz for ***professionel 3 250*** and ***250T*** (type 2071 and 2171)
7675398	Filter canister green with heater 230 V / 50 Hz (EU) for ***professionel 3 250T*** (type 2171) ⚠ **only for freshwater**
7675408	Filter canister green with heater 230 V / 50 Hz (EU) for ***professionel 3 350T*** (type 2173) ⚠ **only for freshwater**

© EHEIM, Germany

2080 External filter *professionel 3* 1200XL
2180 Thermofilter *professionel 3* 1200XLT

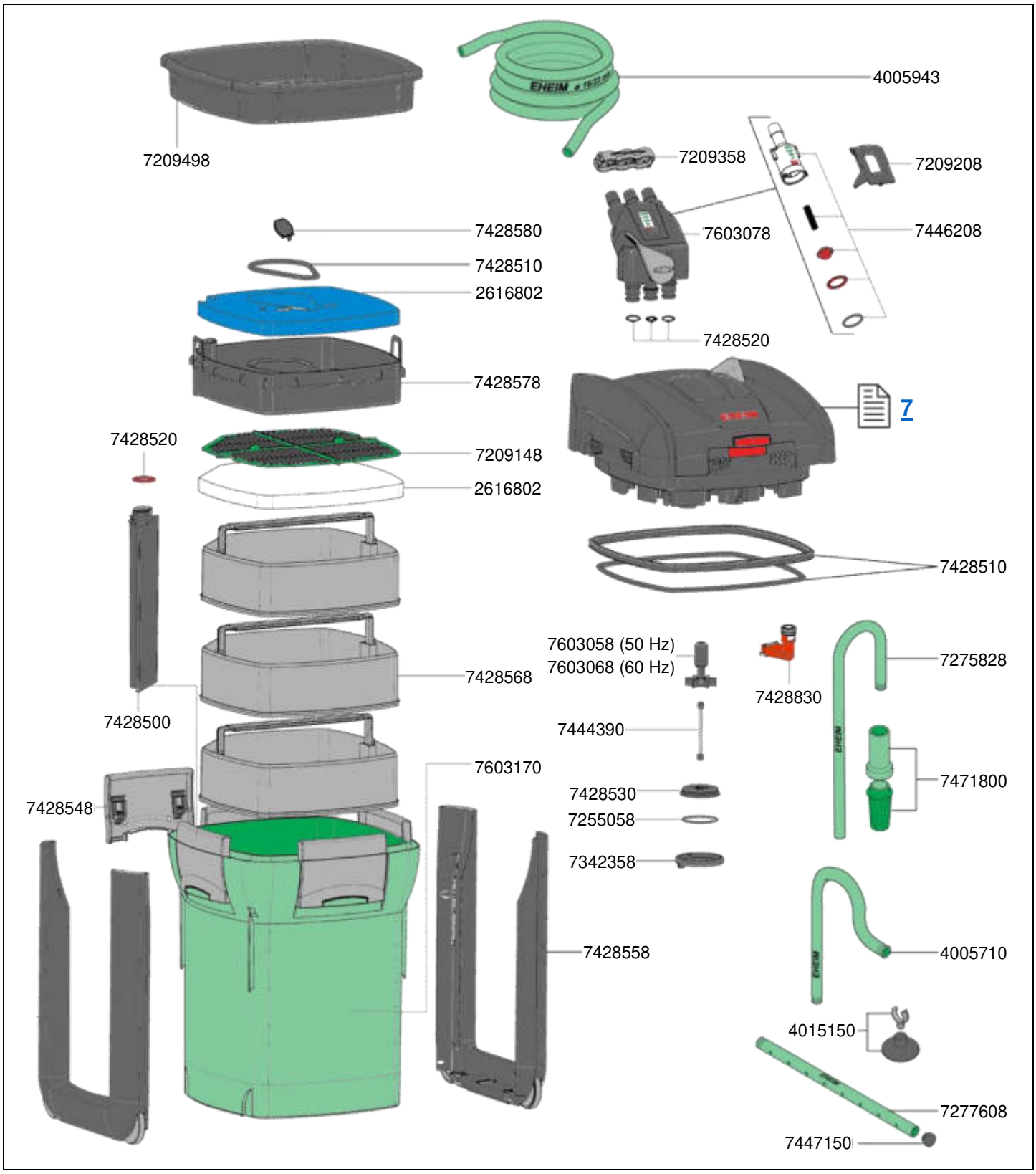

© EHEIM, Germany

2080 External filter *professionel 3* 1200XL
2180 Thermofilter *professionel 3* 1200XLT

Order no.	Spare part
2616802	Set prefilter pad blue (1x) and fine filter pads white (4x)
4005710	Outlet pipe green for hose Ø 16/22 mm
4005943	Hose suction and pressure side Ø 16/22 mm (3 m) green
4015150	Suction cup with clip (2 pieces)
7209148	Lattice screen
7209208	Indicator cover
7209358	Hose clamp complete
7209498	Prefilter container
7255058	Sealing ring
7275828	Intake pipe green for hose Ø 16/22 mm
7277608	Outlet jet pipe green for hose Ø 16/22 mm
7342358	Locking ring
7428500	Separation screen with sealing ring
7428510	Set of sealing rings for canister
7428520	Set of sealing rings for safety adapter and separation screen

Order no.	Spare part
7428530	Pump cover complete with sealing ring and bushing
7428548	EZ clip complete
7428558	Side protection complete
7428568	Filter media container
7428578	Prefilter complete with valve and sealing ring
7428580	Valve with holder
7428830	Output connector complete
7444390	**High Performance Ceramic** shaft with bushings
7446208	Indicator complete with indicator housing, spring, floater and ring
7447150	Set of pipe plugs
7471800	Inlet strainer green
7603058	Impeller (50 Hz)
7603068	Impeller (60 Hz)
7603078	Safety adapter with locking lever
7603170	Filter canister green with 4 EZ clips

© EHEIM, Germany

2074 External filter *professionel 3e 350*

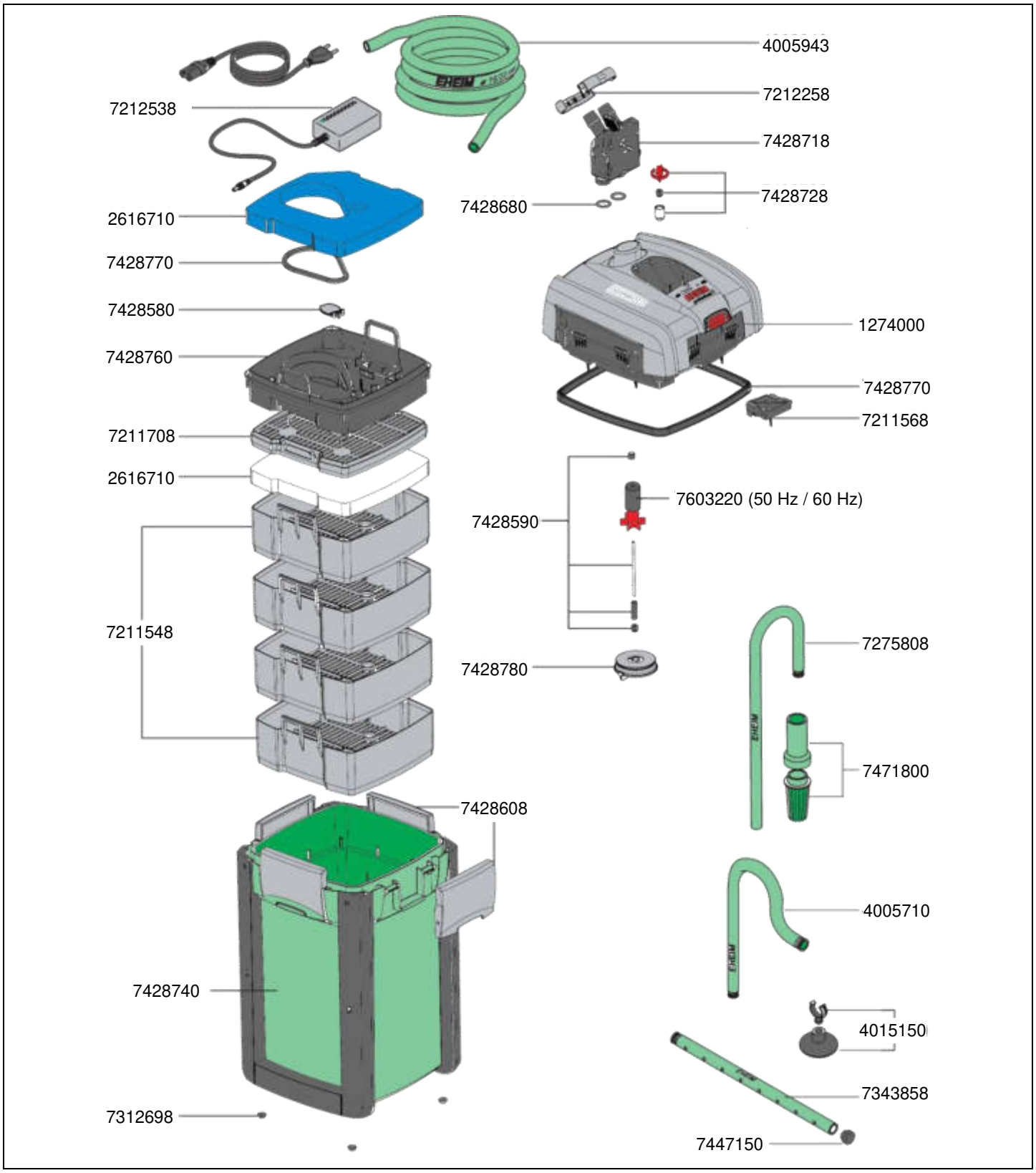

© EHEIM, Germany

2074 External filter *professionel 3e 350*

Order no.	Spare part
1274000	Pump head without adapter for ***professionel 3e 350*** (type 2074) **While stock lasts**
2616710	Set prefilter pad blue (1x) and fine filter pads white (4x)
4005710	Outlet pipe green for hose Ø 16/22 mm
4005943	Hose suction and pressure side Ø 16/22 mm (3 m) green
4015150	Suction cup with clip (2 pieces)
7211548	Filter media container
7211568	Locking device
7211708	Lattice screen
7212258	Hose clamp complete
7212538	Transformer
7275808	Intake pipe green for hose Ø 16/22 mm
7312698	Rubber feet (4 pieces)
7343858	Outlet jet pipe green for hose Ø 16/22 mm

Order no.	Spare part
7428580	Valve with holder
7428590	**High Performance Ceramic** shaft with bushings and distance sleeve ***(electronic)***
7428608	EZ clip complete
7428680	Set of sealing rings for safety adapter
7428718	Safety adapter with locking lever
7428728	Floater complete
7428740	Filter canister green with side protection for ***professionel 3e 350*** (type 2074)
7428760	Prefilter
7428770	Set sealing ring for canister
7428780	Pump cover
7447150	Set of pipe plugs
7471800	Inlet strainer green
7603220	Impeller for 50 Hz and 60 Hz ***(electronic)***

© EHEIM, Germany

2076 External filter *professionel 3e* 450
2078 External filter *professionel 3e* 700
2178 Thermofilter *professionel 3e* 600T

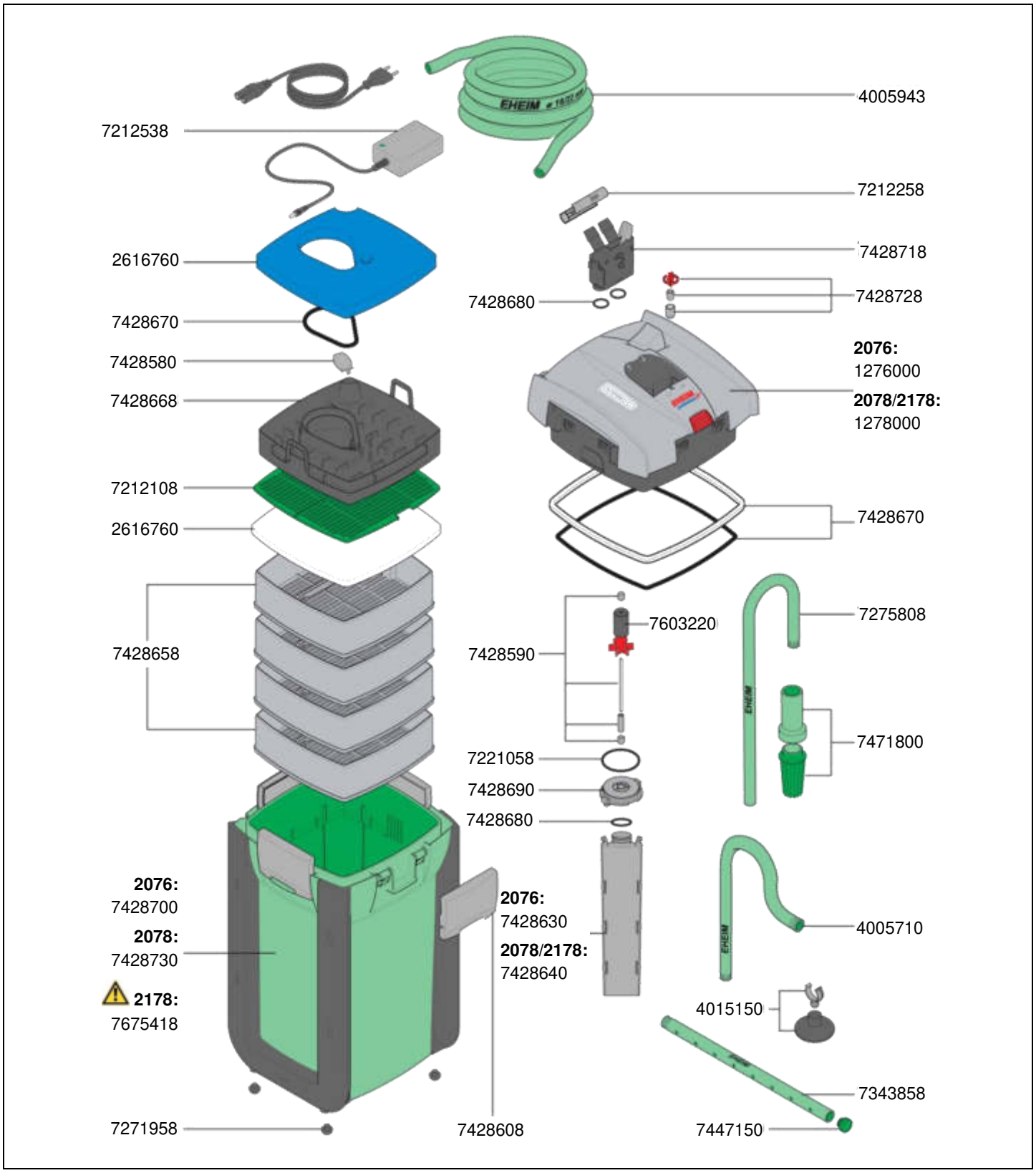

© EHEIM, Germany

2076 External filter *professionel 3e* 450
2078 External filter *professionel 3e* 700
2178 Thermofilter *professionel 3e* 600T

Order no.	Spare part
1276000	Pump head without adapter for ***professionel 5e 450*** (type 2076) **While stock lasts**
1278000	Pump head without adapter for ***professionel 5e 700*** and ***600T*** (type 2078 and 2178) **While stock lasts**
2616760	Set prefilter pad blue (1x) and fine filter pads white (4x)
4005710	Outlet pipe green for hose Ø 16/22 mm
4005943	Hose suction and pressure side Ø 16/22 mm (3 m) green
4015150	Suction cup with clip (2 pieces)
7212108	Lattice screen green
7212258	Hose clamp complete
7212538	Transformer
7221058	Sealing ring for pump cover (2 pieces)
7271958	Rubber feet (5 pieces)
7275808	Intake pipe green for hose Ø 16/22 mm
7343858	Outlet jet pipe green for hose Ø 16/22 mm
7428580	Valve with holder
7428590	**High Performance Ceramic** shaft with bushings and distance sleeve ***(electronic)***
7428608	EZ clip complete

Order no.	Spare part
7428630	Separation screen with sealing ring for ***professionel 3e 450*** (type 2076)
7428640	Separation screen with sealing ring for ***professionel 3e 700*** and ***600T*** (type 2078 and 2178)
7428658	Filter media container
7428668	Prefilter complete with valve and sealing ring
7428670	Set of sealing rings for pump, canister and separation screen
7428680	Set of sealing rings for safety adapter
7428690	Pump cover complete with sealing ring and bushing
7428700	Filter canister green with side protection for ***professionel 3e 450*** (type 2076)
7428718	Safety adapter with locking lever
7428728	Floater complete
7428730	Filter canister green with side protection for ***professionel 3e 700*** (type 2078)
7447150	Set of pipe plugs
7471800	Inlet strainer green
7603220	Impeller for 50 Hz and 60 Hz ***(electronic)***
7675418	Filter canister green with heater 230 V / 50 Hz (EU) for ***professionel 3e 600T*** (type 2178) ⚠ **only for freshwater**

© EHEIM, Germany

2271 External filter *professionel 4+ 250*
2273 External filter *professionel 4+ 350*
2275 External filter *professionel 4+ 600*
2371 Thermofilter *professionel 4+ 250T*
2373 Thermofilter *professionel 4+ 350T*

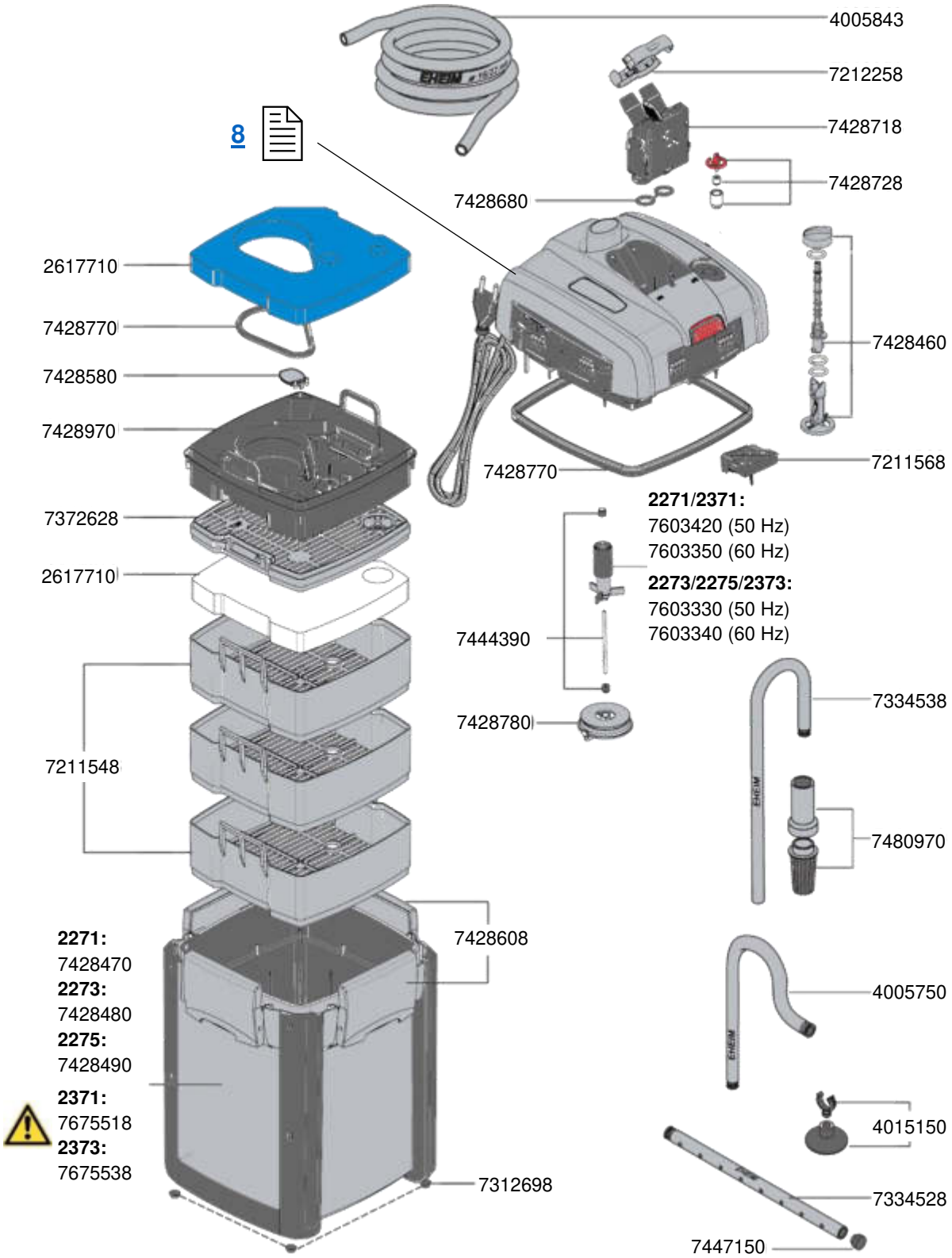

© EHEIM, Germany

2271 External filter *professionel 4+ 250*
2273 External filter *professionel 4+ 350*
2275 External filter *professionel 4+ 600*
2371 Thermofilter *professionel 4+ 250T*
2373 Thermofilter *professionel 4+ 350T*

Order no.	Spare part
2617710	Set prefilter pad blue (1x) and fine filter pads white (4x)
4005750	Outlet pipe anthracite for hose Ø 16/22 mm
4005843	Hose suction and pressure side Ø 16/22 mm (3 m) anthracite
4015150	Suction cup with clip (2 pieces)
7211548	Filter media container
7211568	Locking device
7212258	Hose clamp complete
7312698	Rubber feet (4 pieces)
7334528	Outlet jet pipe anthracite for hose Ø 16/22 mm
7334538	Intake pipe anthracite for hose Ø 16/22 mm
7372628	Lattice screen
7428460	Range Xtender knop complete with 3x sealing ring
7428470	Filter canister anthracite with side protection for ***professionel 4+ 250*** (type 2271)
7428480	Filter canister anthracite with side protection for ***professionel 4+ 350*** (type 2273)
7428490	Filter canister anthracite with side protection for ***professionel 4+ 600*** (type 2275)
7428580	Valve with holder
7428608	EZ clip complete
7428680	Set of sealing rings for safety adapter

Order no.	Spare part
7428718	Safety adapter with locking lever
7428728	Floater complete
7428770	Set sealing ring for canister
7428780	Pump cover
7428970	Prefilter
7444390	**High Performance Ceramic** shaft with bushings
7447150	Set of pipe plugs
7480970	Inlet strainer anthracite
7603330	Impeller 50 Hz for ***professionel 4+ 350, 600*** and ***350T*** (type 2273, 2275 and 2373)
7603340	Impeller 60 Hz for ***professionel 4+ 350, 600*** and ***350T*** (type 2273, 2275 and 2373)
7603350	Impeller 60 Hz for ***professionel 4+ 250*** and ***250T*** (type 2271 and 2371)
7603420	Impeller 50 Hz for ***professionel 4+ 250*** and ***250T*** (type 2271 and 2371)
7675518	Filter canister anthracite with heater 230 V / 50 Hz (EU) for ***professionel 4+ 250T*** (type 2371) ⚠ **only for freshwater**
7675538	Filter canister anthracite with heater 230 V / 50 Hz (EU) for ***professionel 4+ 350T*** (type 2373) ⚠ **only for freshwater**

© EHEIM, Germany

2274 External filter *professionel 4e+ 350*

4005843
7212258
7212538
7428718
7428728
7428680
2617710
7428770
1374000
7428460
7428580
7428970
7428770
7211568
7372628
7603220 (50 Hz / 60 Hz)
2617710
7428590
7334538
7428780
7211548
7480970
7428608
4005750
7428480
4015150
7312698
7334528
7447150

© EHEIM, Germany

2274 External filter *professionel 4e+ 350*

Order no.	Spare part
1374000	Pump head without adapter for ***professionel 4e+ 350*** (type 2274) **While stock lasts**
2617710	Set prefilter pad blue (1x) and fine filter pads white (4x)
4005750	Outlet pipe anthracite for hose Ø 16/22 mm
4005843	Hose suction and pressure side Ø 16/22 mm (3 m) anthracite
4015150	Suction cup with clip (2 pieces)
7211548	Filter media container
7211568	Locking device
7212258	Hose clamp complete
7212538	Transformer
7312698	Rubber feet (4 pieces)
7334528	Outlet jet pipe anthracite for hose Ø 16/22 mm
7334538	Intake pipe anthracite for hose Ø 16/22 mm
7372628	Lattice screen

Order no.	Spare part
7428460	Range Xtender knop complete with 3x sealing ring
7428480	Filter canister anthracite with side protection for ***professionel 4e+ 350*** (type 2274)
7428580	Valve with holder
7428590	**High Performance Ceramic** shaft with bushings and distance sleeve ***(electronic)***
7428608	EZ clip complete
7428680	Set of sealing rings for safety adapter
7428718	Safety adapter with locking lever
7428728	Floater complete
7428770	Set sealing ring for canister
7428780	Pump cover
7428970	Prefilter
7447150	Set of pipe plugs
7480970	Inlet strainer anthracite
7603220	Impeller for 50 Hz and 60 Hz ***(electronic)***

© EHEIM, Germany

2274 External filter *professionel 5e 350*

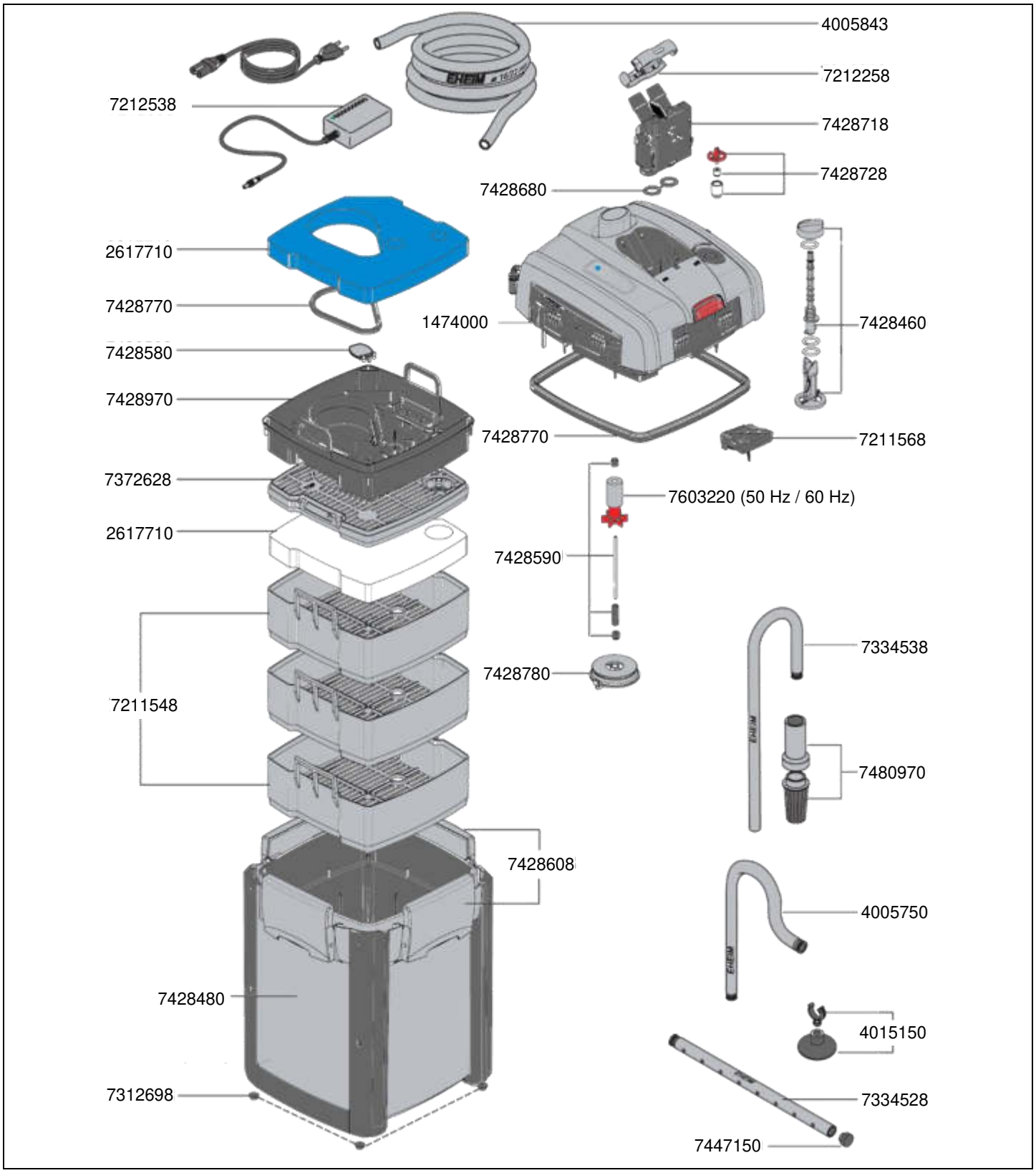

© EHEIM, Germany

2274 External filter *professionel 5e 350*

Order no.	Spare part
1474000	Pump head without adapter for ***professionel 5e 350*** (type 2274)
2617710	Set prefilter pad blue (1x) and fine filter pads white (4x)
4005750	Outlet pipe anthracite for hose Ø 16/22 mm
4005843	Hose suction and pressure side Ø 16/22 mm (3 m) anthracite
4015150	Suction cup with clip (2 pieces)
7211548	Filter media container
7211568	Locking device
7212258	Hose clamp complete
7212538	Transformer
7312698	Rubber feet (4 pieces)
7334528	Outlet jet pipe anthracite for hose Ø 16/22 mm
7334538	Intake pipe anthracite for hose Ø 16/22 mm
7372628	Lattice screen

Order no.	Spare part
7428460	Range Xtender knop complete with 2x sealing ring
7428480	Filter canister anthracite with side protection for ***professionel 5e 350*** (type 2274)
7428580	Valve with holder
7428590	Ceramic shaft with bushings and distance sleeve ***(electronic)***
7428608	EZ clip complete
7428680	Set of sealing rings for safety adapter
7428718	Safety adapter with locking lever
7428728	Floater complete
7428770	Set sealing ring for canister
7428780	Pump cover
7428970	Prefilter
7447150	Set of pipe plugs
7480970	Inlet strainer anthracite
7603220	Impeller for 50 Hz and 60 Hz ***(electronic)***

© EHEIM, Germany

2076 External filter *professionel 5e 450*
2078 External *professionel 5e 700*
2178 Thermofilter *professionel 5e 600T*

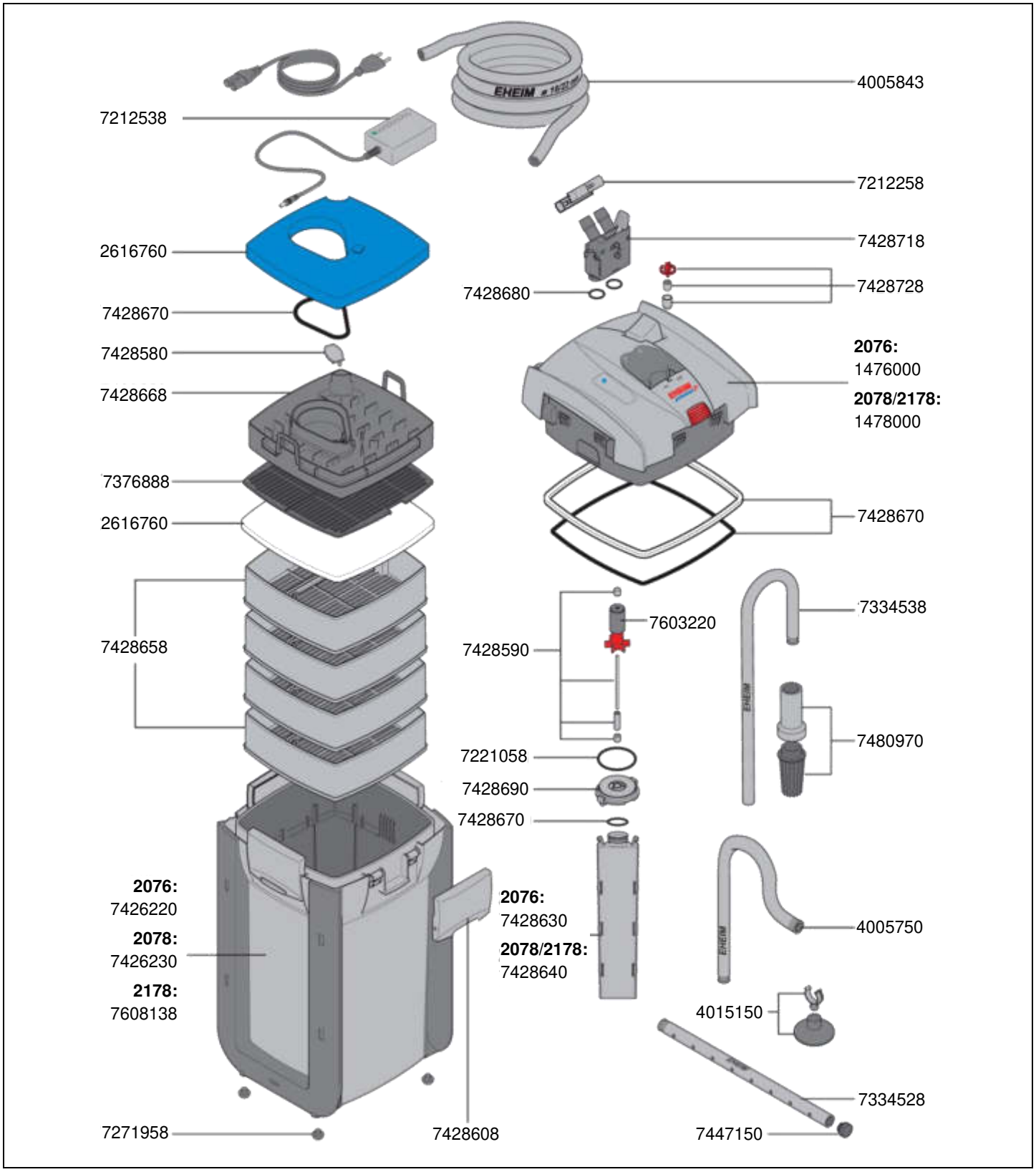

© EHEIM, Germany

2076 External filter *professionel 5e* 450
2078 External *professionel 5e* 700
2178 Thermofilter *professionel 5e* 600T

Order no.	Spare part
1476000	Pump head without adapter for ***professionel 5e 450*** (type 2076)
1478000	Pump head without adapter for ***professionel 5e 700*** and ***600T*** (type 2078 and 2178)
2616760	Set prefilter pad blue (1x) and fine filter pads white (4x)
4005750	Outlet pipe anthracite for hose Ø 16/22 mm
4005843	Hose suction and pressure side Ø 16/22 mm (3 m) anthracite
4015150	Suction cup with clip (2 pieces)
7212258	Hose clamp complete
7212538	Transformer
7221058	Sealing ring for pump cover (2 pieces)
7271958	Rubber feet (5 pieces)
7334528	Outlet jet pipe anthracite for hose Ø 16/22 mm
7334538	Intake pipe anthracite for hose Ø 16/22 mm
7376888	Lattice screen anthracite
7426220	Filter canister anthracite with side protection for ***professionel 5e 450*** (type 2076)
7426230	Filter canister anthracite with side protection for ***professionel 5e 700*** (type 2078)

Order no.	Spare part
7428580	Valve with holder
7428590	Ceramic shaft with bushings and distance sleeve ***(electronic)***
7428608	EZ clip complete
7428630	Separation screen with sealing ring for ***professionel 5e 450*** (type 2076)
7428640	Separation screen with sealing ring for ***professionel 5e 700*** and ***600T*** (type 2078 and 2178)
7428658	Filter media container
7428668	Prefilter complete with valve and sealing ring
7428670	Set of sealing rings for pump, canister and separation screen
7428680	Set of sealing rings for safety adapter
7428690	Pump cover complete with sealing ring and bushings
7428718	Safety adapter with locking lever
7428728	Floater complete
7447150	Set of pipe plugs
7480970	Inlet strainer anthracite
7603220	Impeller for 50 Hz and 60 Hz ***(electronic)***
7608138	Filter canister anthracite with heater 230 V / 50 Hz (EU) for ***professionel 5e 600T*** (type 2178) ⚠ **only for freshwater**

© EHEIM, Germany

6400 Nano aquarium set aquastyle 16 l
6401 Nano aquarium set aquastyle 24 l
6402 Nano aquarium set aquastyle 35 l

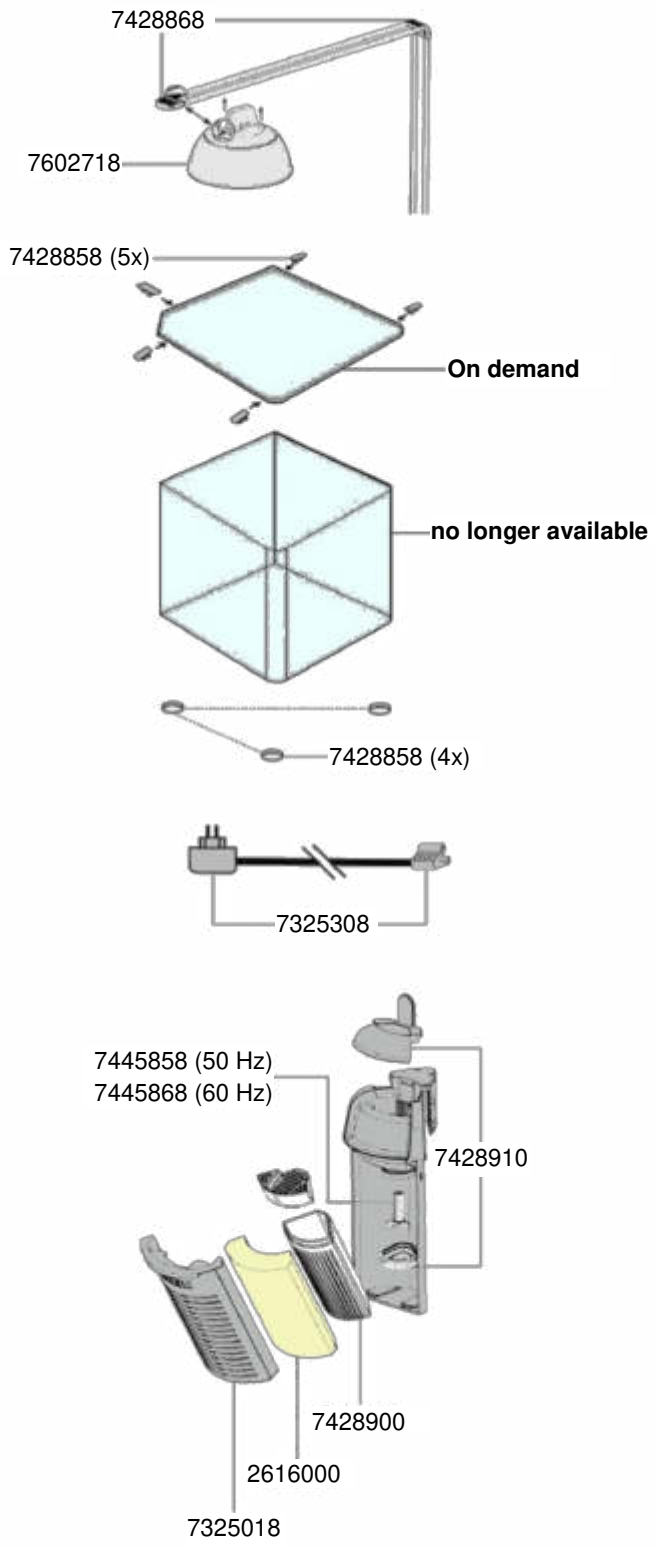

Order no.	Spare part
2616000	Filter cartridge (2 pieces)
7325018	Filter cover
7325308	Transformer with Europe plug 100 - 240V/50 and 60Hz **While stock lasts**
7428858	Set hood clip (5x) and rubber feed (4x)
7428868	Parts for lamp holder
7428900	Mediabox with cover
7428910	Cover set
7445858	Impeller (50 Hz) for internal filter **aquacorner**60 (type 2000)
7445868	Impeller (60 Hz) for internal filter **aquacorner**60 (type 2000)
7602718	Power LED lamp daylight **While stock lasts**

© EHEIM, Germany

6406 Nano aquarium set nanoshrimp 35 l

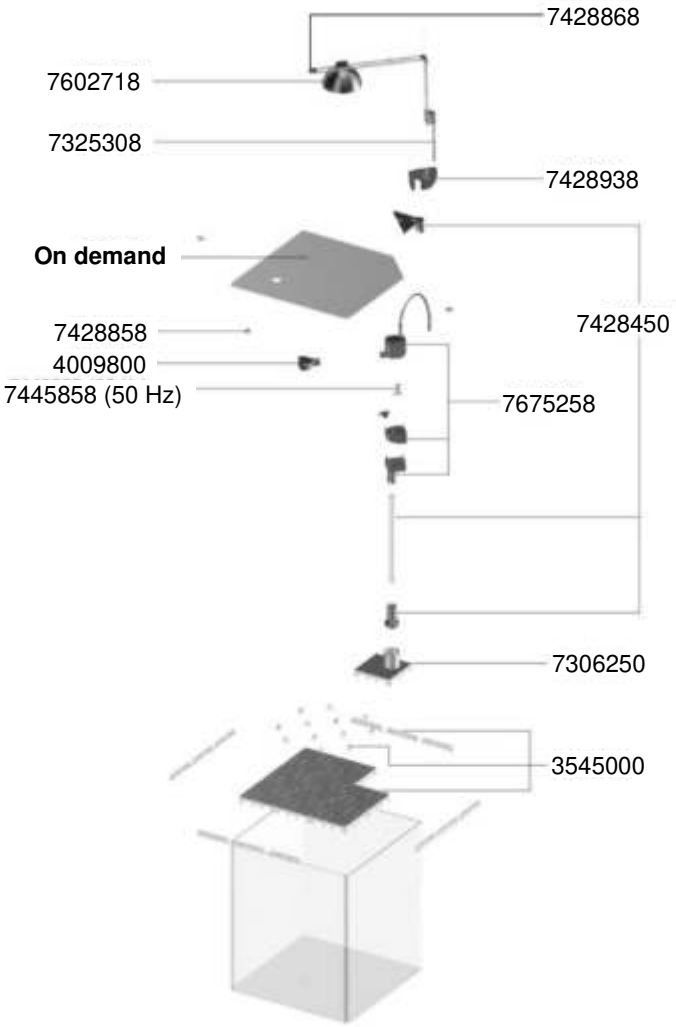

Order no.	Spare part
3545000	Undergravel filter (6x), side panel & spring-mounted clamps
4009800	Connector-Set (incl. airstone)
7306250	Connection plate
7325308	Transformer with Europe plug 100 - 240V/50 and 60Hz **While stock lasts**
7428450	corner cover, PVC pipe & plug-on piece
7428858	Set hood clip (5x) and rubber feed (4x)
7428868	Parts for lamp holder
7428938	Clamp
7445858	Impeller (50 Hz)
7602718	Power LED lamp daylight **While stock lasts**
7675258	Pump complete 230V / 50Hz, Europe plug

© EHEIM, Germany

6410 Nano aquarium **nano**marine 35 l

EHEIM nanomarine 35

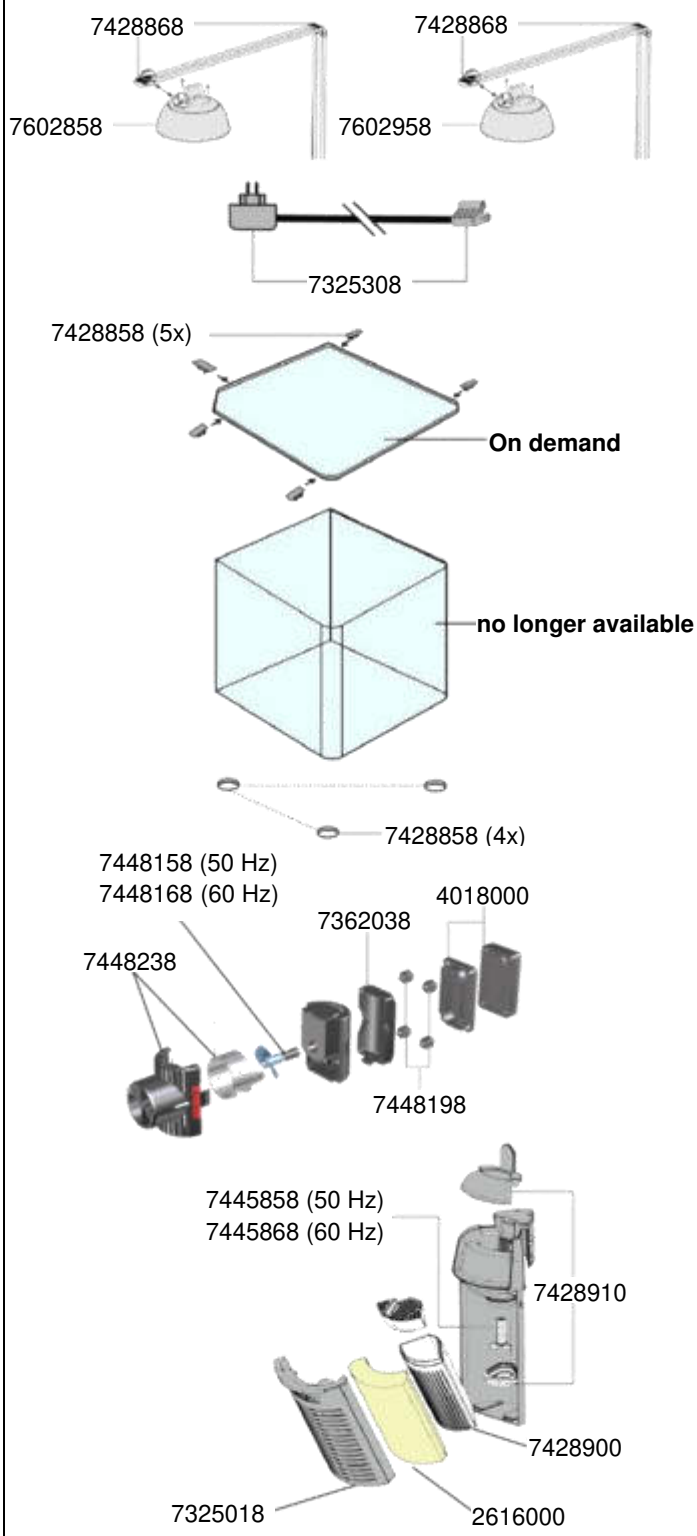

Order no.	Spare part
2616000	Filter cartridge (2 pieces)
4010800	Magnet holder complete with 4 pieces cushions
7325018	Filter cover
7325308	Transformer with Europe plug 100 - 240V/50 and 60Hz **While stock lasts**
7362038	Pump holder
7428858	Set hood clip (5x) and rubber feed (4x)
7428868	Parts for lamp holder
7428900	Mediabox with cover
7428910	Cover set
7445858	Impeller (50 Hz) for internal filter **aquacorner**60 (type 2000)
7445868	Impeller (60 Hz) for internal filter **aquacorner**60 (type 2000)
7448158	Impeller (50 Hz) for streaming pump **streamON** 2000 (type 1080)
7448168	Impeller (60 Hz) for streaming pump **streamON** 2000 (type 1080
7448198	Dumping buffer (4 pieces)
7448238	Pump housing complete with output regulator
7602858	Power LED lamp daylight & actinic blue **While stock lasts**
7602958	Power LED lamp actinic blue **While stock lasts**

© EHEIM, Germany

6471 powerLED daylight
powerLED actinic blue
powerLED daylight & actinic blue

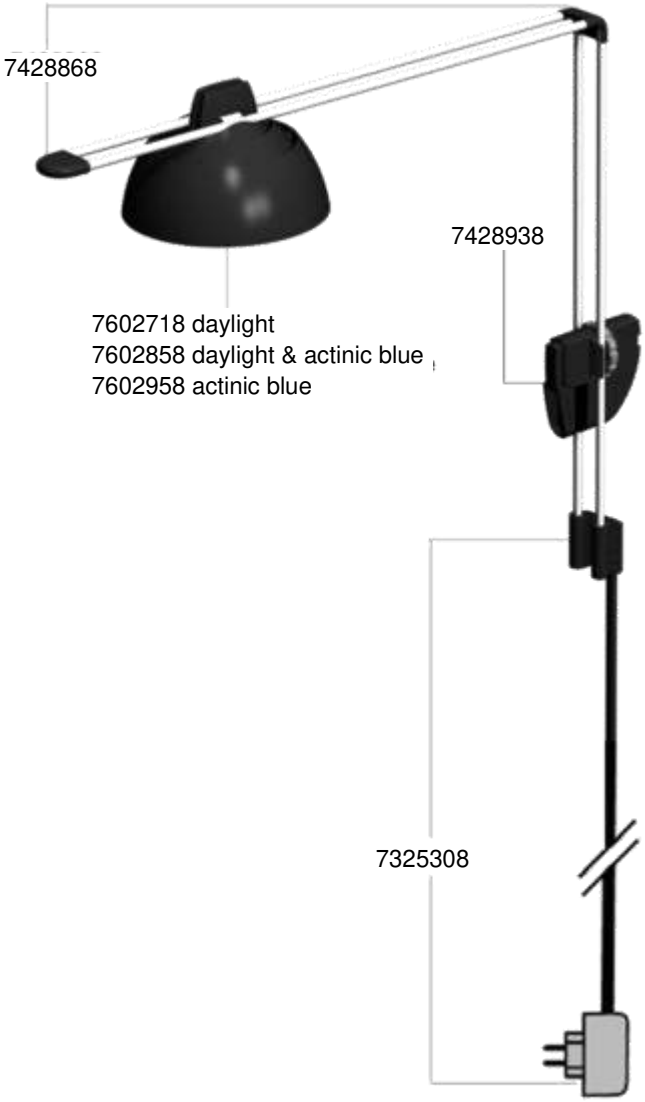

Order no.	Spare part
7325308	Transformer with Europe plug 100 - 240V/50 and 60Hz **While stock lasts**
7428868	Parts for lamp holder
7428938	Clamp
7602718	Power LED lamp daylight **While stock lasts**
7602858	Power LED lamp daylight & actinic blue **While stock lasts**
7602958	Power LED lamp actinic blue **While stock lasts!**

© EHEIM, Germany

3531 Automatic gravel cleaner Quick Vac pro

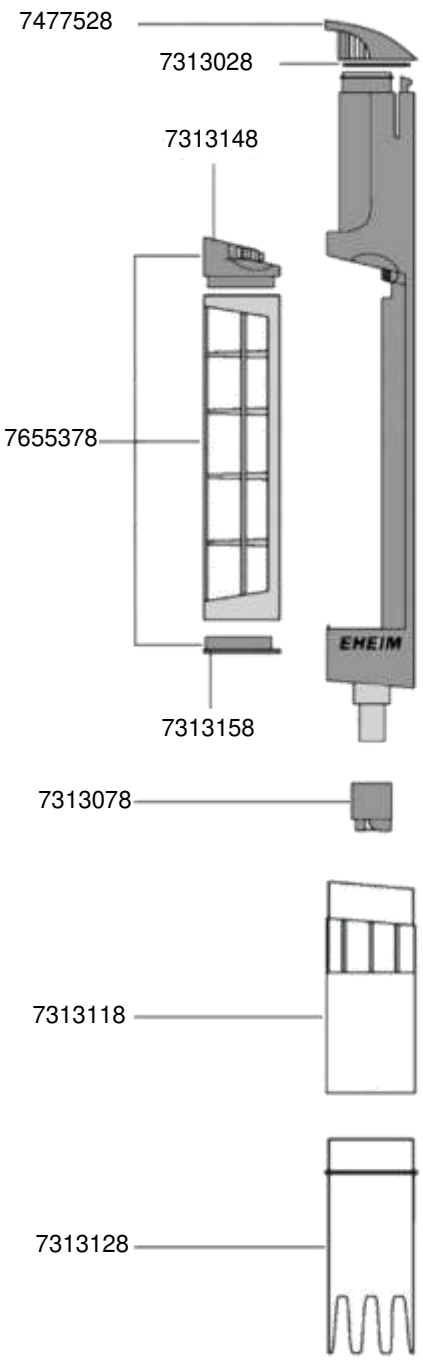

Order no.	Spare part
7313028	Sealing ring (2 pieces)
7313078	Impeller
7313118	Suction nozzle
7313128	Extension nozzle
7313148	Upper cover
7313158	Lower cover
7477528	Compl. cover for battery compartment
7655378	Complete filter element

© EHEIM, Germany

3533 Glass scraper **power**Cleaner

Order no.	Spare part
3591004	Blade holder with blade guard (1 piece)
7316018	Sealing ring
7428940	Cover complete with sealing ring
7428950	Grip complete

© EHEIM, Germany

3535 Surface skimmer

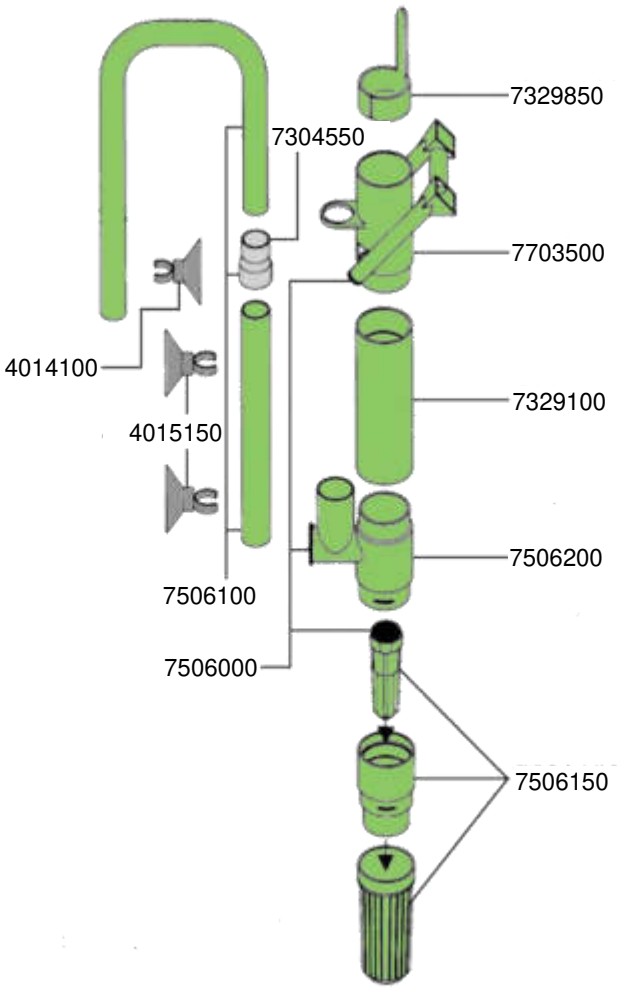

Order no.	Spare part
4014100	Suction cup with clip (2 pieces)
4015150	Suction cup with clip (2 pieces)
7304550	Hose piece (2 pieces)
7329100	Pipe piece
7329850	Locking device
7506000	Set of plugs
7506100	Pipe set
7506150	Valve
7506200	Bottom inlet
7703500	Intake float

© EHEIM, Germany

3536 Surface extractor skim350

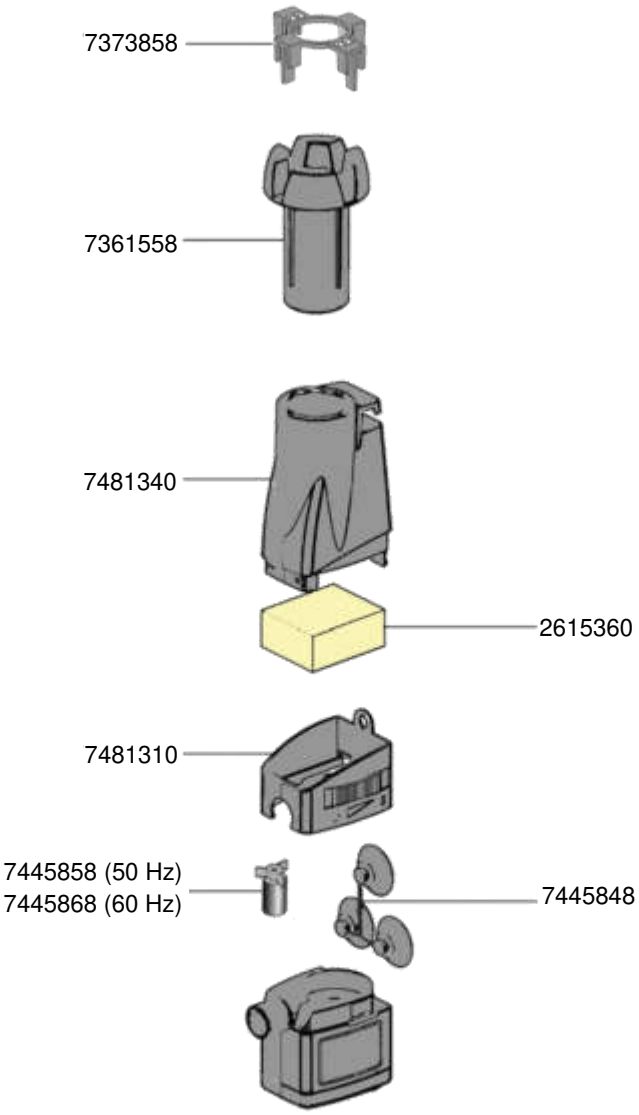

Order no.	Spare part
2615360	Filter cartridge (2 pieces)
7361558	Float
7373858	Float insert
7445848	Suction cup (4 pieces)
7445858	Impeller (50 Hz)
7445868	Impeller (60 Hz)
7481310	Pump cover complete with power regulator
7481340	Float housing with filter cartridge and cable clip

© EHEIM, Germany

4002510 Gravel cleaner set

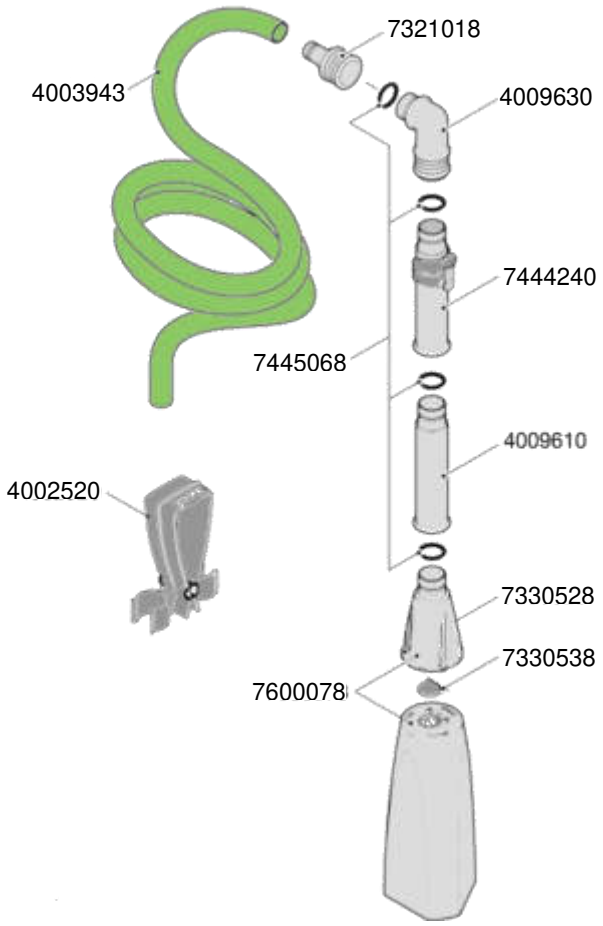

Order no.	Spare part
4002520	Hose clip
4003943	Hose Ø 9/12 mm (3 m)
4009610	Extension kit 1, 2 extension pieces with sealing rings
4009630	Elbow with sealing ring
7321018	Nozzle for hose Ø 9/12 mm
7330528	Adapter
7330538	Valve
7445068	Sealing rings (5 pieces)
7444240	Tube complete with Quick Aqua Stop
7600078	Gravel cleaner complete, incl. Adapter, valve and gravel cleaner

© EHEIM, Germany

4003000 Air Filter

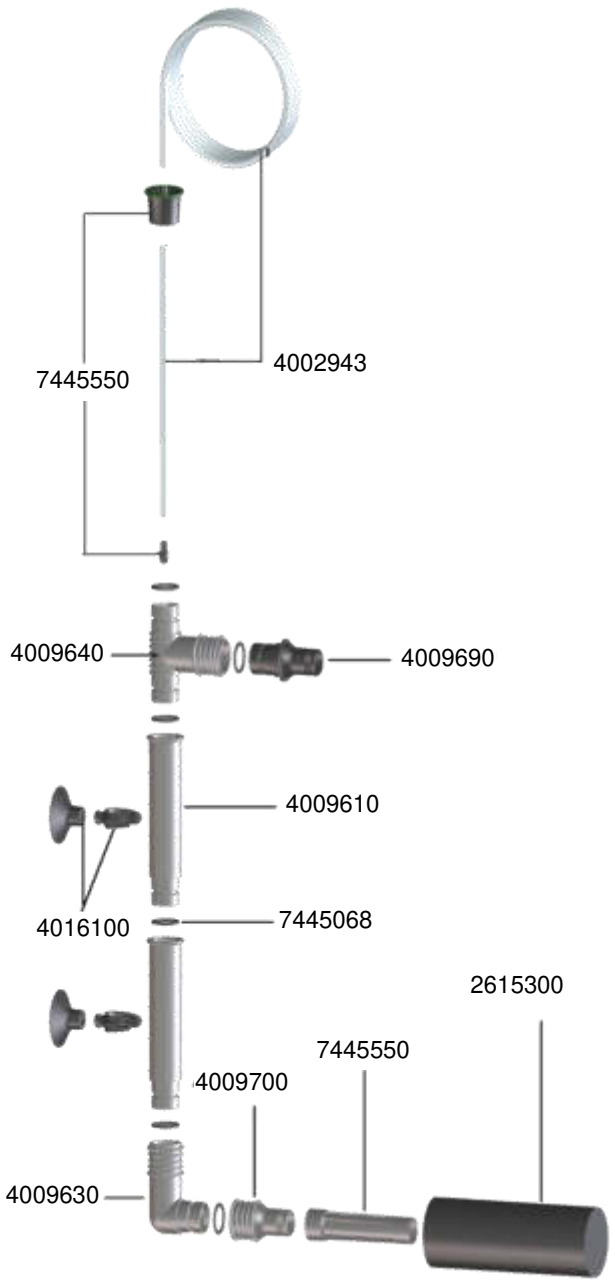

Order no.	Spare part
2615300	Filter cartridge (2 pieces)
4002943	Hose Ø 4/6 mm (3 m)
4009610	Extension tube (2 pieces)
4009630	Elbow piece
4009640	T-piece
4009690	Hose-to-tube connectors
4009700	Nozzle and adapter pieces
4016100	Suction cup with clip (2 pieces)
7445068	Set sealing ring
7445550	Connection seal, diffuser and filter tube

© EHEIM, Germany

4004300 InstallationKIT1 for Ø 12 mm
4005300 InstallationKIT1 for Ø 16 mm

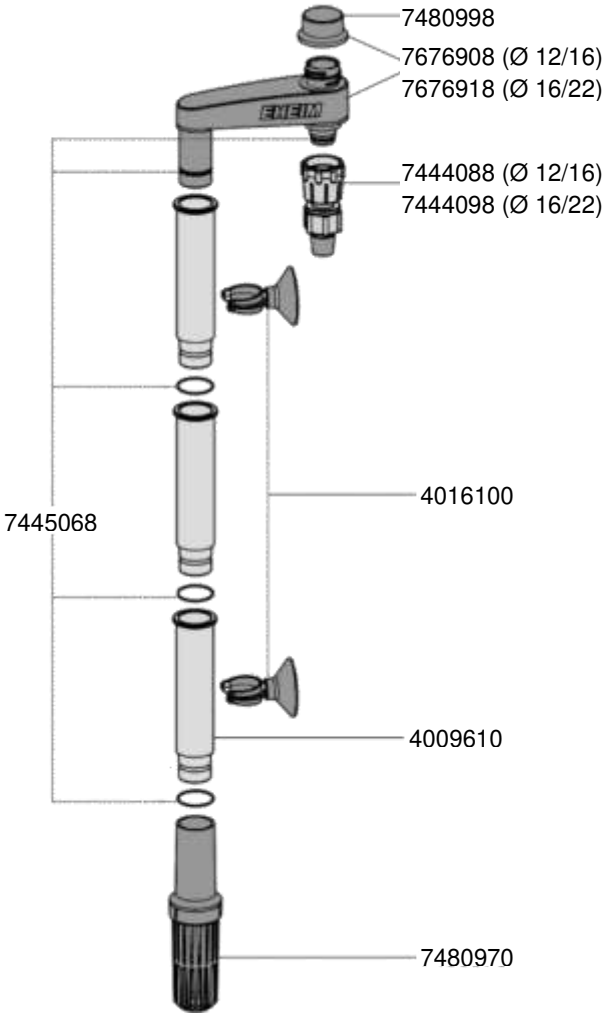

Order no.	Spare part
4009610	Extension kit 1 with 2 extension tubes
4016100	Suction cup with clip (2 pieces)
7444088	Hose coupling for Ø 12/16 mm
7444098	Hose coupling for Ø 16/22 mm
7445068	Set sealing rings
7480970	Inlet strainer
7480998	Cap
7676908	Connector complete with cap and sealing rings for hose Ø 12/16 mm
7676918	Connector complete with cap and sealing rings for hose Ø 16/22 mm

© EHEIM, Germany

4004310 InstallationSET2 for Ø 12 mm
4005310 InstallationSET2 for Ø 16 mm

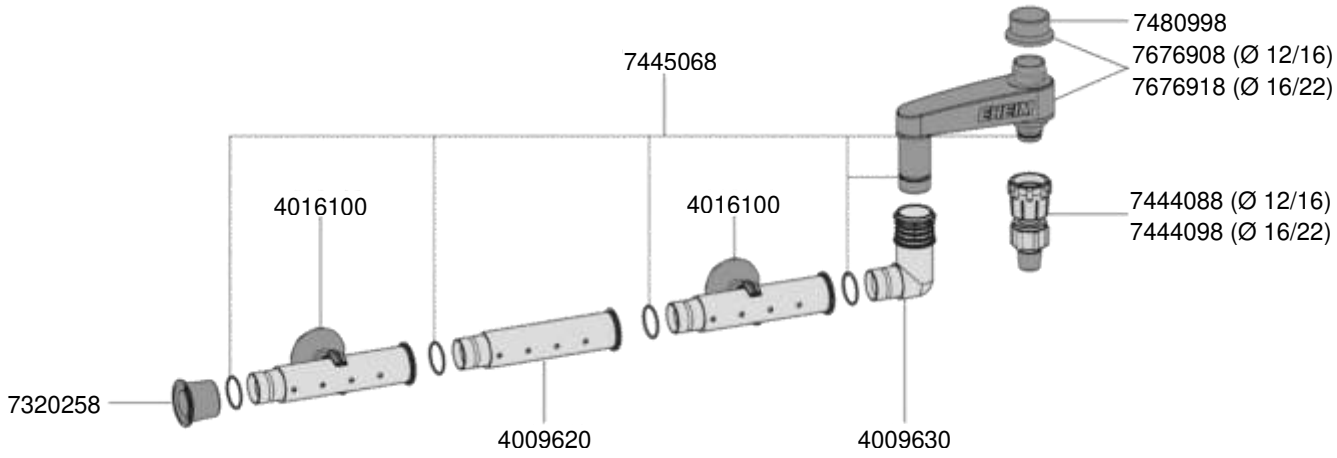

Order no.	Spare part
4009620	Extension kit2 with 2x outlet jet pipes and 1x plug
4009630	Elbow piece
4016100	Suction cup with clip (2 pieces)
7320258	Plug
7444088	Hose coupling for Ø 12/16 mm
7444098	Hose coupling for Ø 16/22 mm

Order no.	Spare part
7445068	Set sealing rings
7480998	Cap
7676908	Connector complete with cap and sealing rings for hose Ø 12/16 mm
7676918	Connector complete with cap and sealing rings for hose Ø 16/22 mm

© EHEIM, Germany

4004320 Prefilter

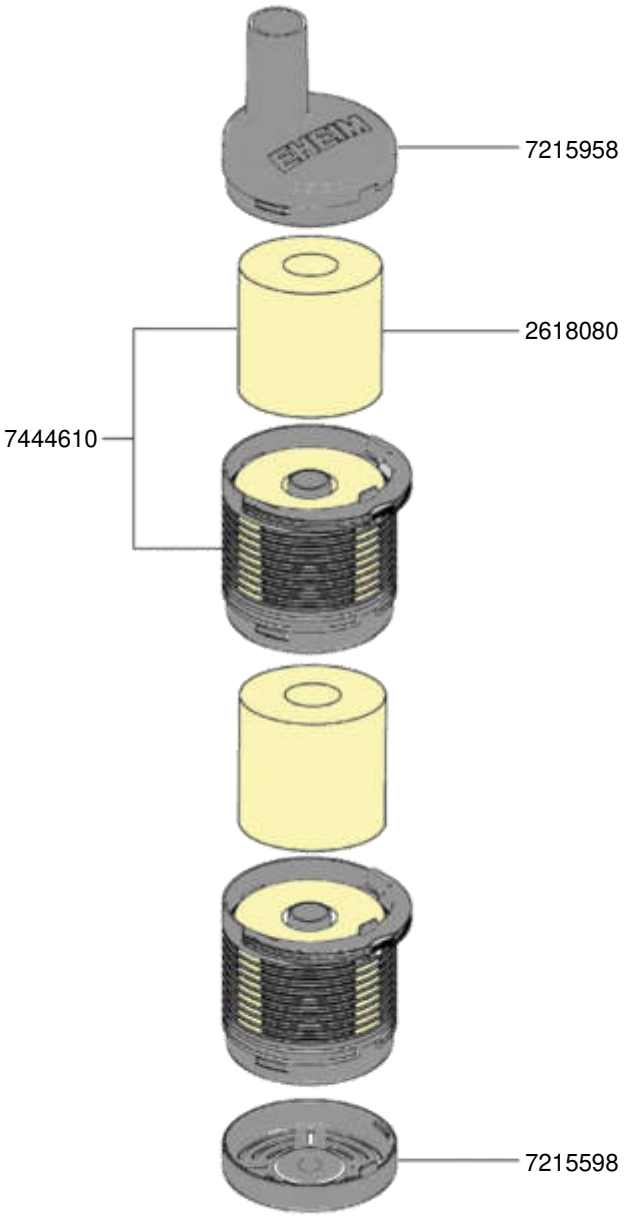

Order no.	Spare part
2618080	Filter cartridge (2 pieces)
7215598	Filter bottom
7215958	Prefilter cover
7444610	Prefilter with filter cartridge

© EHEIM, Germany

4004620 Prefilter

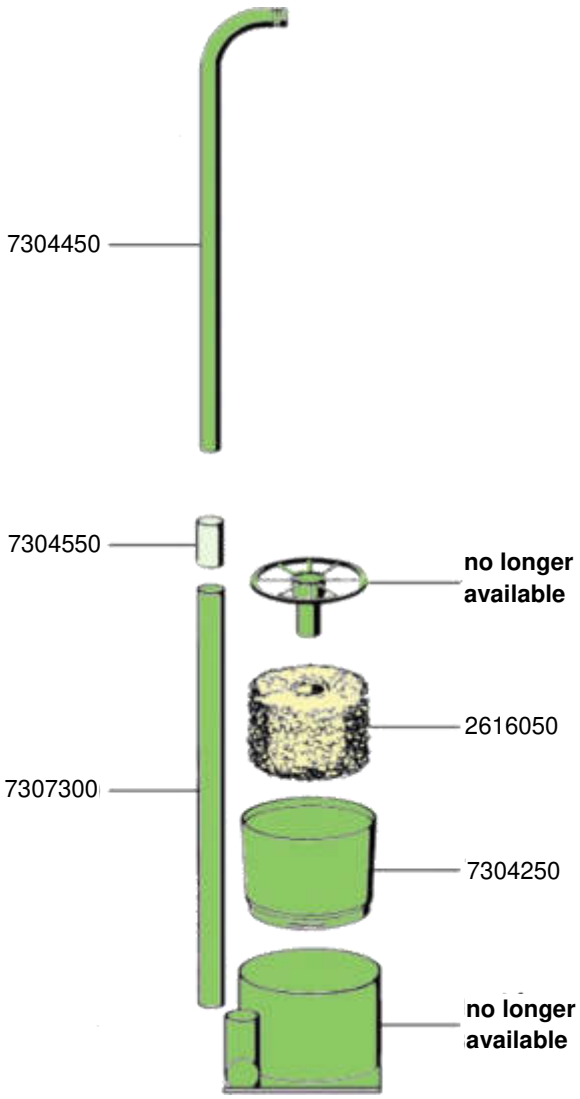

Order no.	Spare part
2616050	Insert for prefilter (2 pieces)
7304250	Housing
7304450	Intake pipe
7304550	Hose piece (2 pieces)
7307300	Pipe
7501800	**no longer available**
7501850	**no longer available**

© EHEIM, Germany

3551 nano protein skimmer skimmarine100

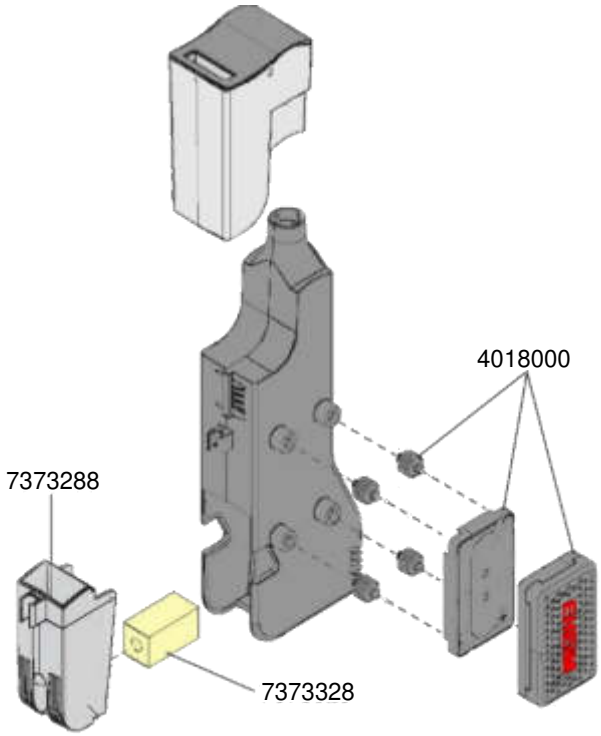

Order no.	Spare part
4010800	Magnet holder complete with 4 pieces dumping buffer
7373288	Box
7373328	Lime wood diffusor (3 pieces)

© EHEIM, Germany

3549 mini Protein skimmer skimmarine300

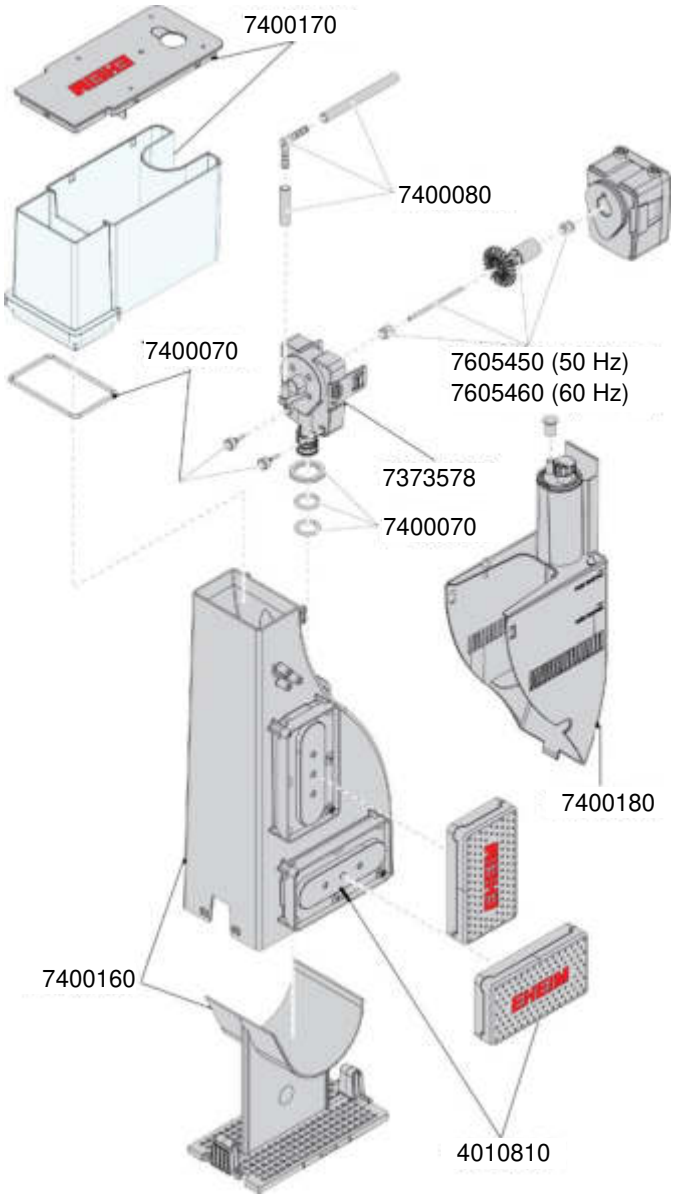

Order no.	Spare part
4010810	Magnet holder complete with 4 pieces dumping buffer
7373578	Pump cover
7400070	Set sealing ring with 2x damping buffer
7400080	Set of silicon hose with elbow
7400160	Housing base complete (without magnet holder)
7400170	Foam cup complete with cover and seal
7400180	Air control unit complete (without pump)
7605450	Impeller (50 Hz) complete with V4A shaft and bushings
7605460	Impeller (60 Hz) complete with V4A shaft and bushings

© EHEIM, Germany

3552 Protein skimmer skimmarine600

Order no.	Spare part
7475560	Sealing ring for pump cover (2 pieces)
7482020	Ceramic shaft with bushings
7430000	Pump cover with sealing ring bushing and holding ring
7607728	Needle wheel pump 230 V / 50 Hz, EUR
7633758	Needle wheel (50 Hz)

© EHEIM, Germany

3540 Undergravel filter reverse flow principle
3541 Undergravel filter suction principle

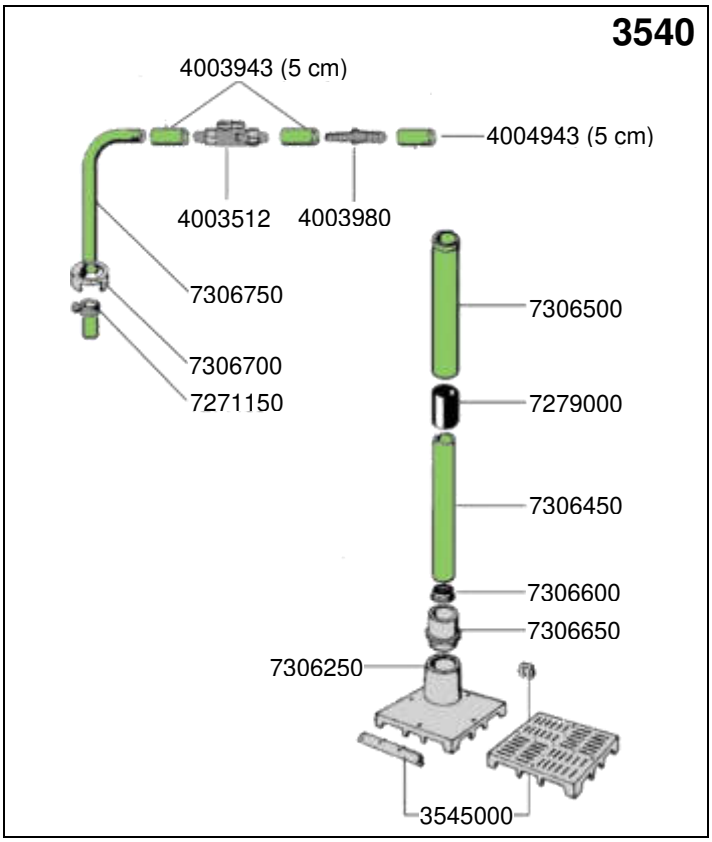

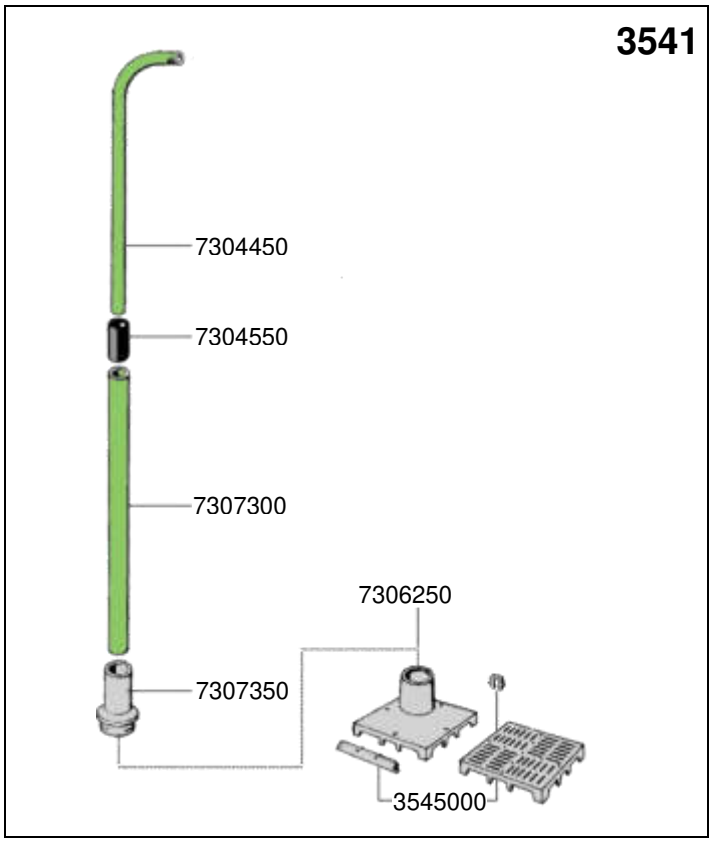

Order no.	Spare part
4003512	Shut-off tap
4003943	Hose Ø 9/12 mm (3 m)
4003980	Reducer
4004943	Hose Ø 12/16 mm (3 m)
7271150	Clip (3 pieces)
7279000	Hose piece
7306250	Connecting plate
7306450	Connecting pipe
7306500	Through-flow pipe
7306550	Snap-in part
7306600	Adjusting disc (2 pieces)
7306700	Clamping sleeve
7306750	Inlet pipe

Order no.	Spare part
7304450	Intake pipe
7304550	Hose piece (2 pieces)
7306250	Connecting plate
7307300	Pipe
7307350	Snap-in part

Extensions set for 3540 / 3541

3545000	6 extension plates 9x9 cm with side protections and conntecting pieces

© EHEIM, Germany

3582 Automatic fish feeder TWIN

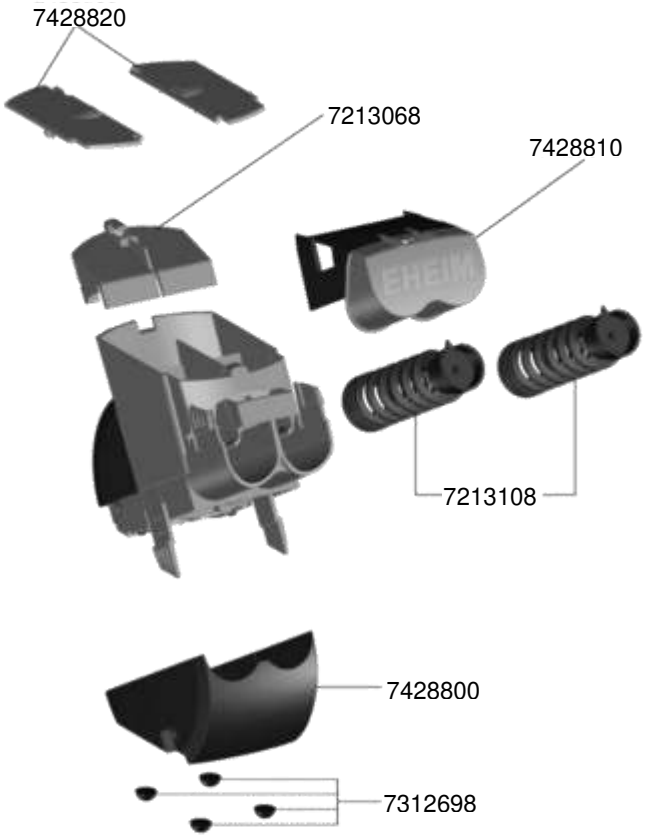

Order no.	Spare part
7213068	Canister insert
7213108	Spiral
7312698	Rubber feet (4 pieces)
7428800	Battery case complete (without batteries)
7428810	Stop valve with holder
7428820	Canister lid left and right

© EHEIM, Germany

3583 Wifi automatic feeder autofeeder+

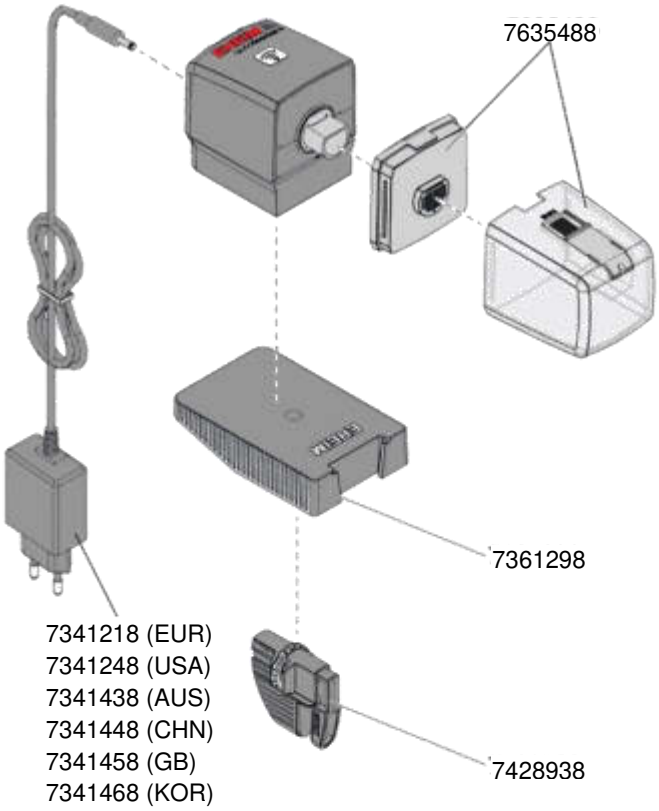

Order no.	Spare part
7341218	Power supply for Europe
7341248	Power supply for USA/CAN)
7341438	Power supply for Australia
7341448	Power supply for China
7341458	Power supply for Great Britain
7341468	Power supply for Korea
7361298	Plate
7428938	Clamp
7635488	Feed container unit complete feed container with cover and slider for feed dispensing

© EHEIM, Germany

3611 – 3619 Aquarium heater thermocontrol
3652 – 3657 Aquarium heater thermopreset

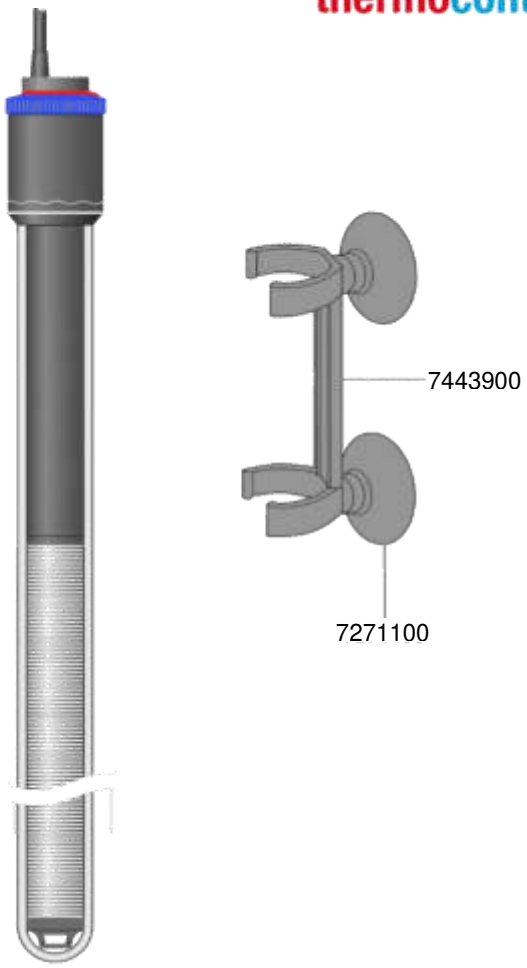

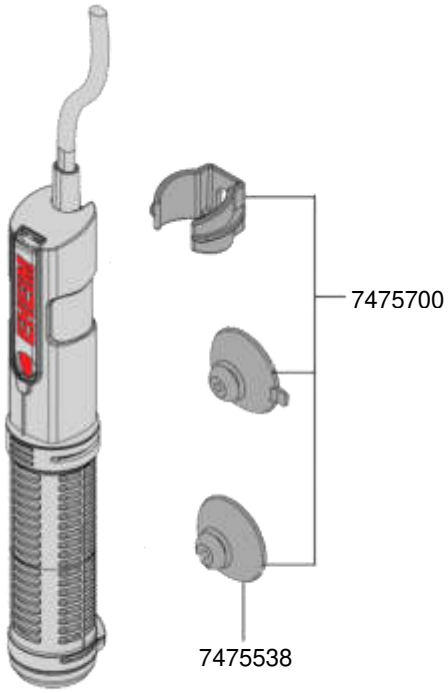

Order no.	Spare part
7271100	Suction cup (4 pieces)
7443900	Double suction cup holder

Order no.	Spare part
7475538	Suction cup (4 pieces)
7475700	Suction cups holder cpl.

© EHEIM, Germany

3631 – 3640 Aquarium heater thermocontrol e
3666 – 3670 Aquarium heater thermocontrol+ e

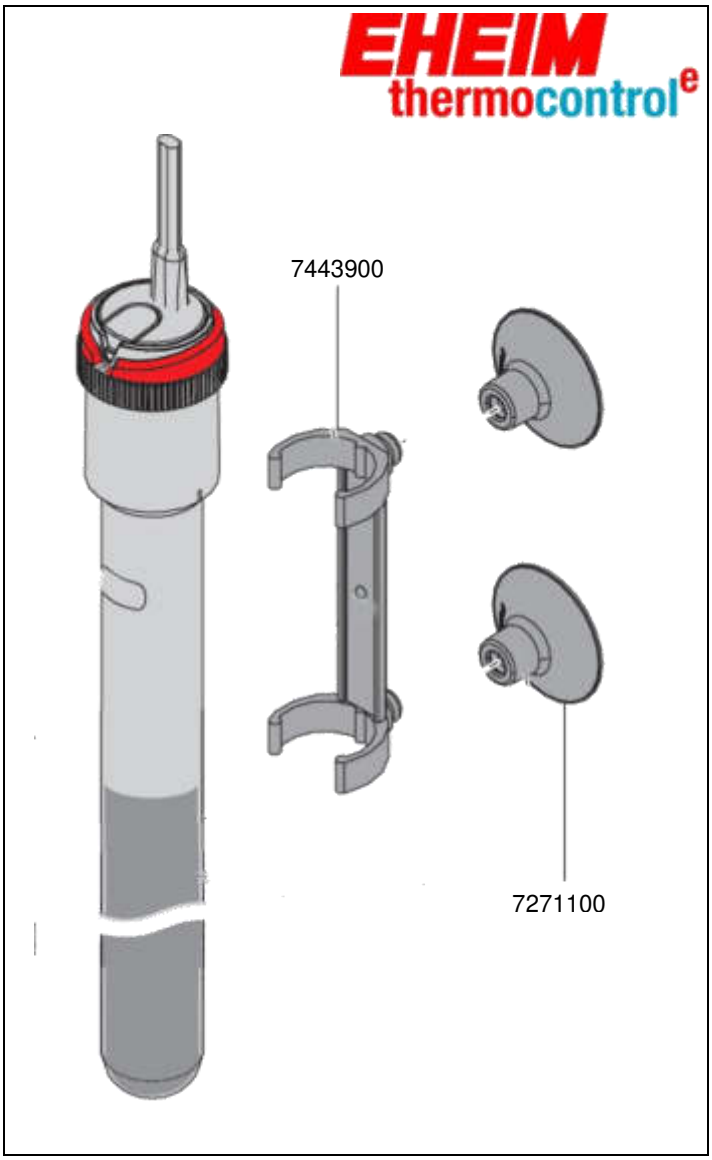

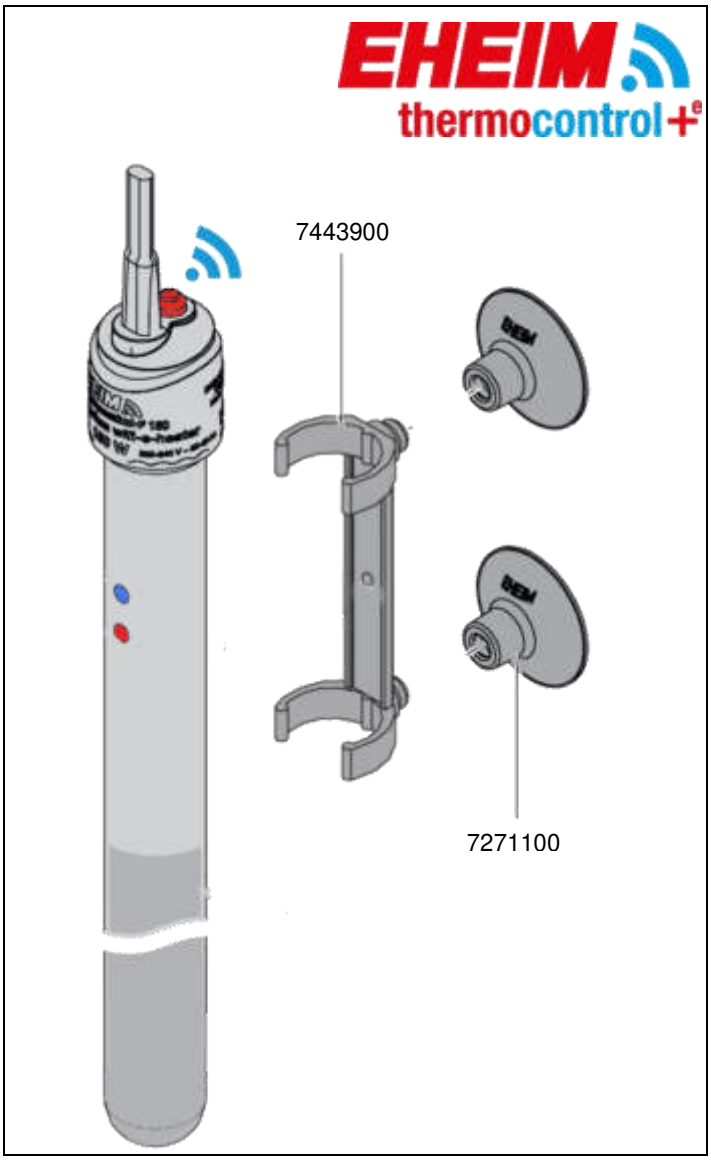

Order no.	Spare part
7271100	Suction cup (4 pieces)
7443900	Double suction holder

Order no.	Spare part
7271100	Suction cup (4 pieces)
7443900	Double suction holder

© EHEIM, Germany

3701 Air pump air 100
3702 Air pump air 200
3704 Air pump air 400

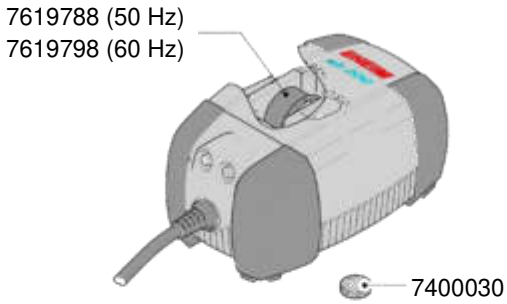

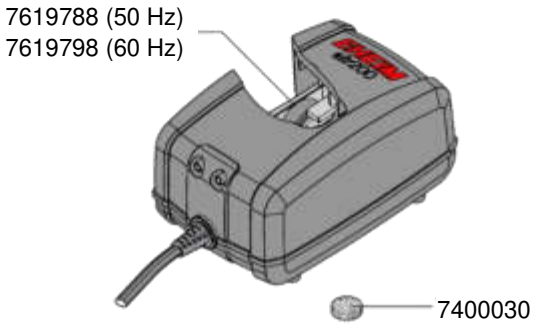

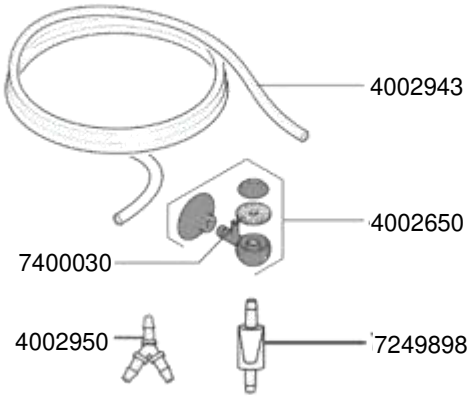

Order no.	Spare part
4002650	Air diffuser with suction cup
4002943	Hose Ø 4/6 mm (3 m)
4002950	Y-hose connector for hose Ø 4/6 mm (2 pieces)
7249898	Check valve for hose-Ø 4/6 mm (2 pieces) **Not suitable for CO_2 systems**
7400030	Air cleaner (4 pieces) and felt wheel (2 pieces)
7619788	Swing arm (50 Hz) with membrane
7619798	Swing arm (60 Hz) with membrane

© EHEIM, Germany

3721 UV - Steriliser reeflexUV 350
3722 UV - Steriliser reeflexUV 500
3723 UV - Steriliser reeflexUV 800

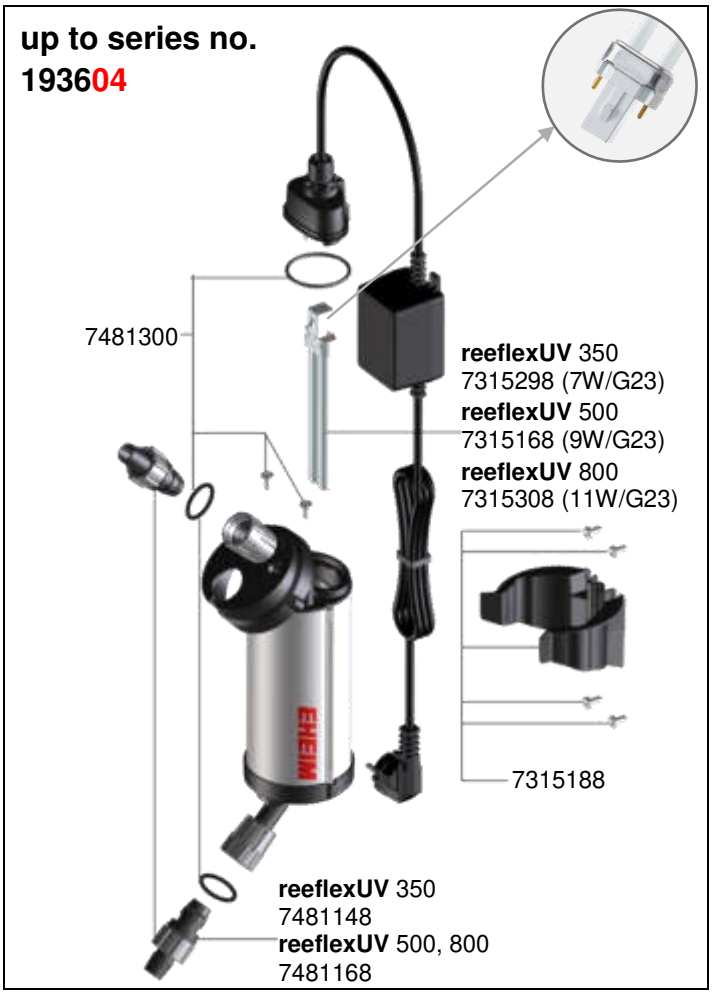

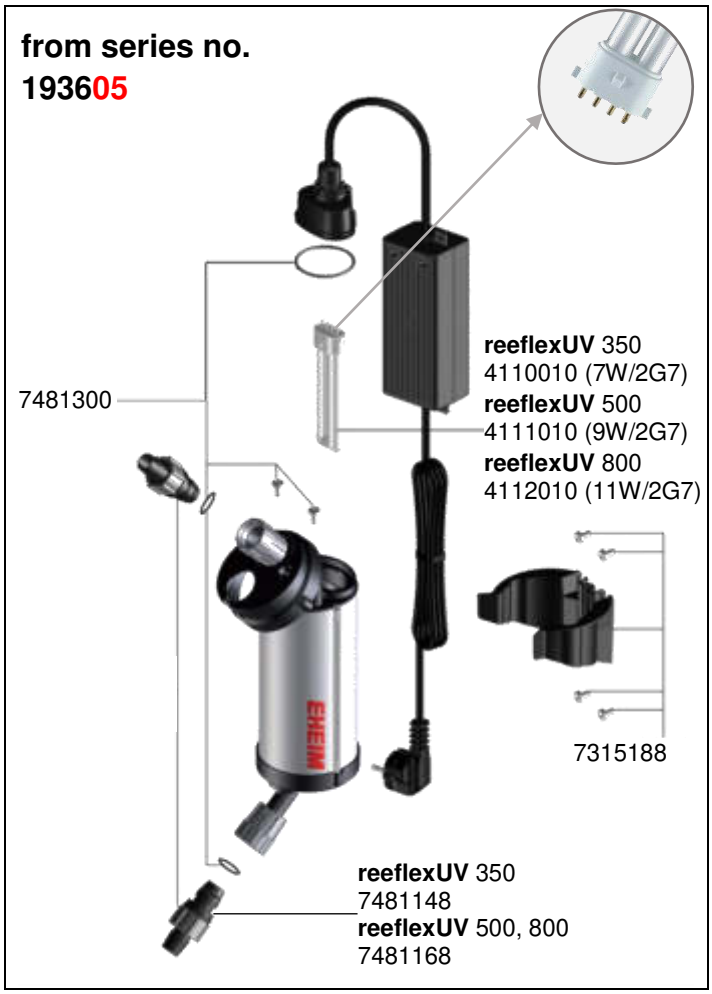

Order no.	Spare part
7315298	UV-C-lamp (7 Watt, **G23**) for **reeflexUV** 350
7315168	UV-C-lamp (9 Watt, **G23**) for **reeflexUV** 500
7315308	UV-C-lamp (11 Watt, **G23**) for **reeflexUV** 800
7315188	Holder with 4x screws
7481148	Threaded connector hose Ø 12/16 mm for **reeflexUV** 350
7481168	Threaded connector hose Ø 16/22 mm for **reeflexUV** 500 and 800
7481300	Set of sealing rings and 2x screws

Order no.	Spare part
4110010	UV-C-lamp (7 Watt, **2G7**) for **reeflexUV** 350
4111010	UV-C-lamp (9 Watt, **2G7**) for **reeflexUV** 500
4112010	UV-C-lamp (11 Watt, **2G7**) for **reeflexUV** 800
7315188	Holder with 4x screws
7481148	Threaded connector hose Ø 12/16 mm for **reeflexUV** 350
7481168	Threaded connector hose Ø 16/22 mm for **reeflexUV** 500 and 800
7481300	Set of sealing rings and 2x screws

© EHEIM, Germany

3721 UV - Steriliser reeflexUV 350
3722 UV - Steriliser reeflexUV 500
3723 UV - Steriliser reeflexUV 800
3724 UV - Steriliser reeflexUV 1500
3725 UV - Steriliser reeflexUV 2000

From serial no. 211610

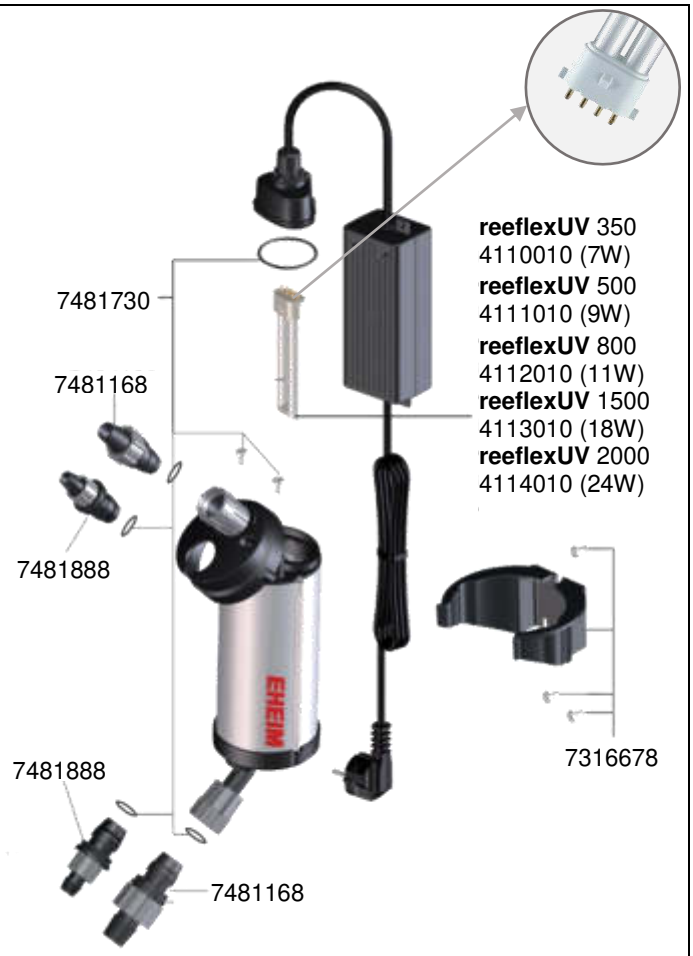

Order no.	Spare part
4110010	UV-C-lamp (7 Watt, **2G7**) for **reeflexUV** 350
4111010	UV-C-lamp (9 Watt, **2G7**) for **reeflexUV** 500
4112010	UV-C-lamp (11 Watt, **2G7**) for **reeflexUV** 800
4113010	UV-C-lamp (18 Watt, **2G11**) for **reeflexUV** 1500
4114010	UV-C-lamp (24 Watt, **2G11**) for **reeflexUV** 2000
7316678	Holder with screws
7481168	Threaded connector hose Ø 16/22 mm
7481730	Set of sealing rings and screws
7481888	Threaded connector hose Ø 12/16 mm

© EHEIM, Germany

3750 Climate control unit climacontrol+ S
3751 Climate control unit climacontrol+ M
3752 Climate control unit climacontrol+ L

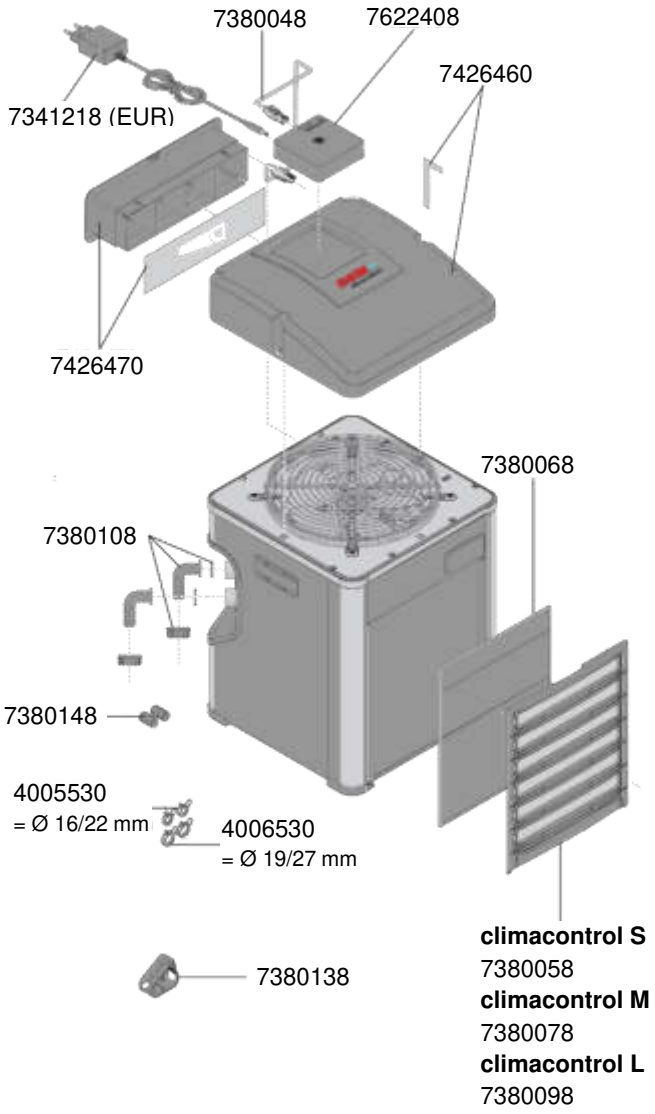

Order no.	Spare part
4005530	Hose lock for hose-Ø 16/22 mm
4006530	Hose lock for hose-Ø 19/27 mm
7341218	Switching power supply unit 24V (EUR)
7380048	RJ45 data cable length 50 cm
7380058	Plastic grille for **climacontrol+ S** type 3750
7380068	Air filter
7380078	Plastic grille for **climacontrol+ M** type 3751
7380098	Plastic grille for **climacontrol+ L** type 3752
7380108	Hose connector 90° with union nut and seal
7380138	Hose clamp
7380148	Reducing coupling from hose-Ø 16/22 mm to hose-Ø 19/27 mm (2 pcs.)
7426460	Cover with wrench
7426470	Warm exhaust air duct with template
7622408	WiFi controller

© EHEIM, Germany

4211 – 4245 Lamp **power**LED
4251 – 4259 Lamp **power**LED+
4261 – 4266 Lamp **classic**LED

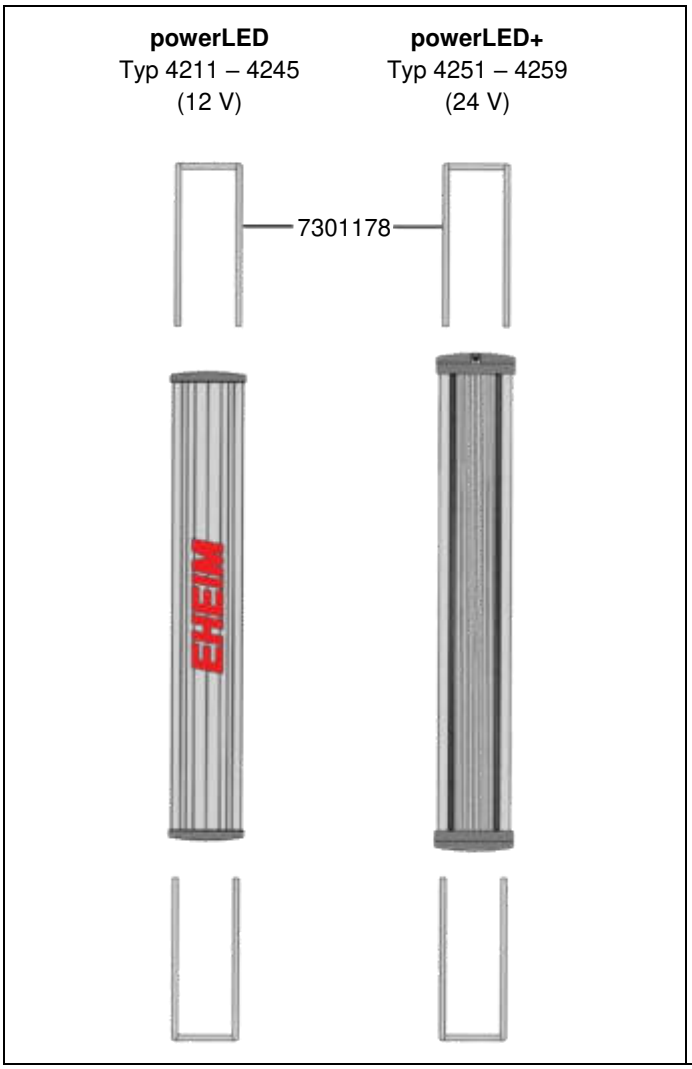

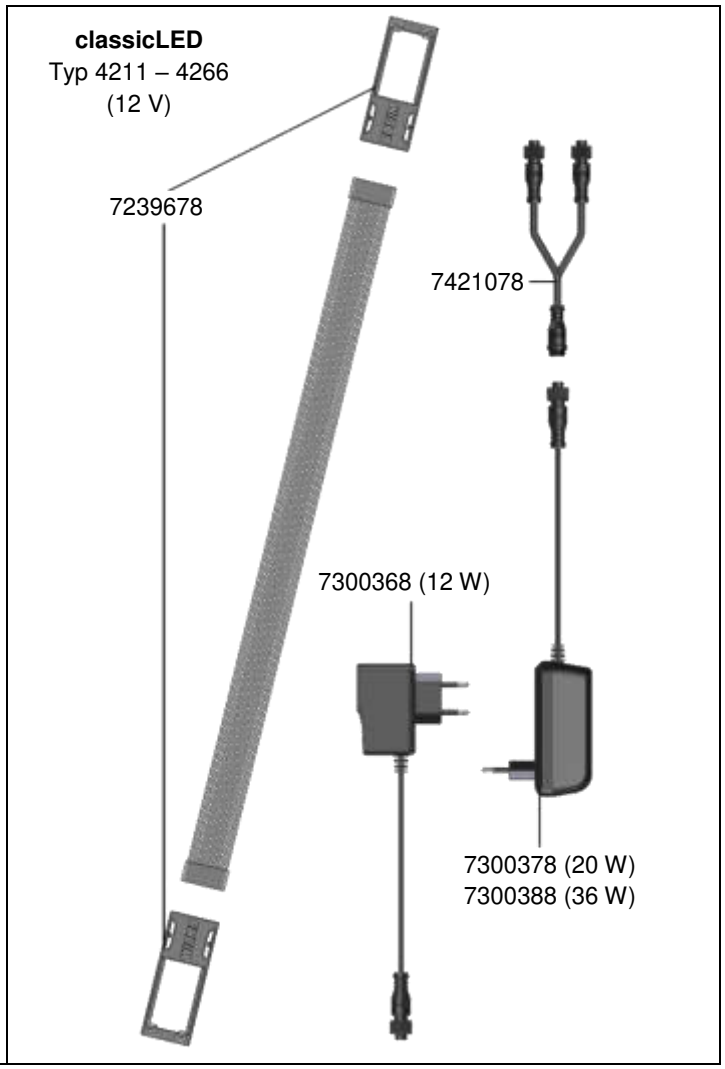

Order no.	Spare part
7301178	Stainless steel wire bow (2 pieces) for EHEIM **powerLED** and EHEIM **powerLED+**

Order no.	Spare part
7239678	Holder (2 pieces) for EHEIM **classicLED**
7300368	Power supply for **classicLED** (12 W)
7300378	Power supply for **classicLED** (20 W)
7300388	Power supply for **classicLED** (36 W)
7421078	Connector for **classicLED** **Only use with 36 W power supply unit**

© EHEIM, Germany

6063200 CO2Set 200

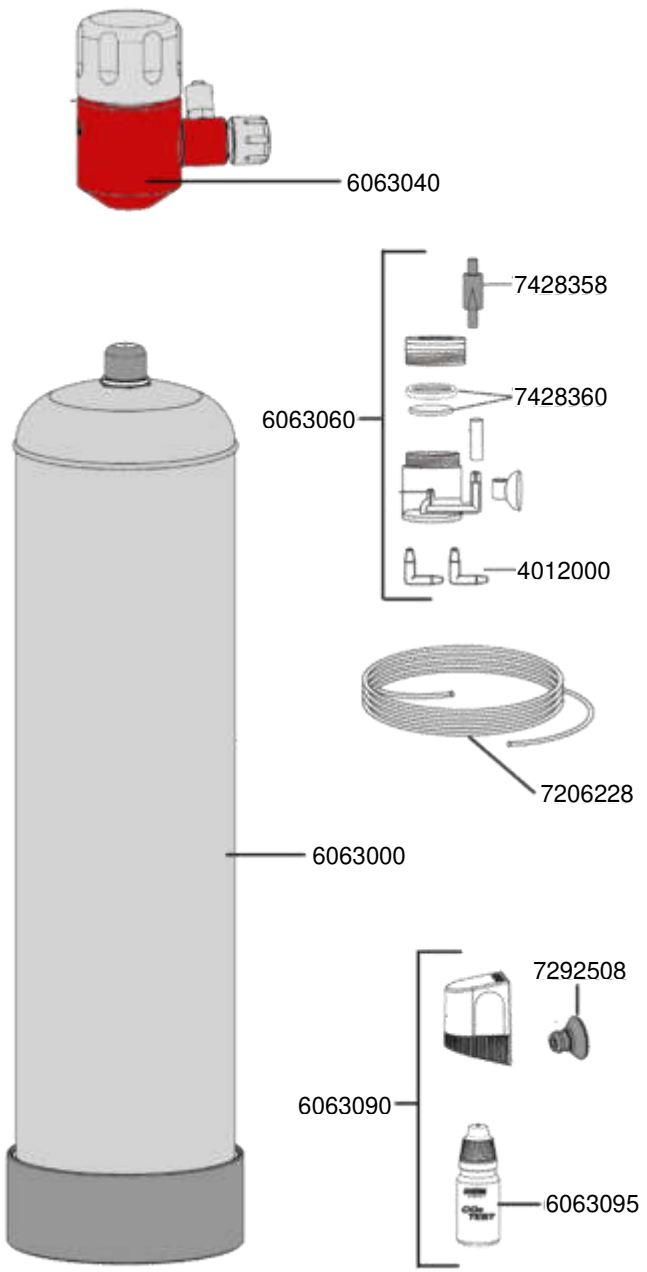

Order no.	Spare part
4012000	Elbow connector for hose-Ø 4/6 mm (2 pieces)
6063000	CO_2-bottle 500 g disposable
6063040	CO_2-pressure reducer for disposable system
6063060	CO_2-diffuser up to 400 l with integrated check valve and bubble counter, 2x elbow connector and suction cup
6063090	Set long-term test with indicator liquid (10 ml) and 3x test stripes
6063095	Indicator liquid (10 ml) for EHEIM long-term test
7206228	CO_2-hose Ø 4/6 mm (3 m)
7292508	Suction cup (4 pieces)
7428358	CO_2-check valve
7428360	Ceramic disc with gasket for CO_2-diffuser

© EHEIM, Germany

6063400 CO2Set 400

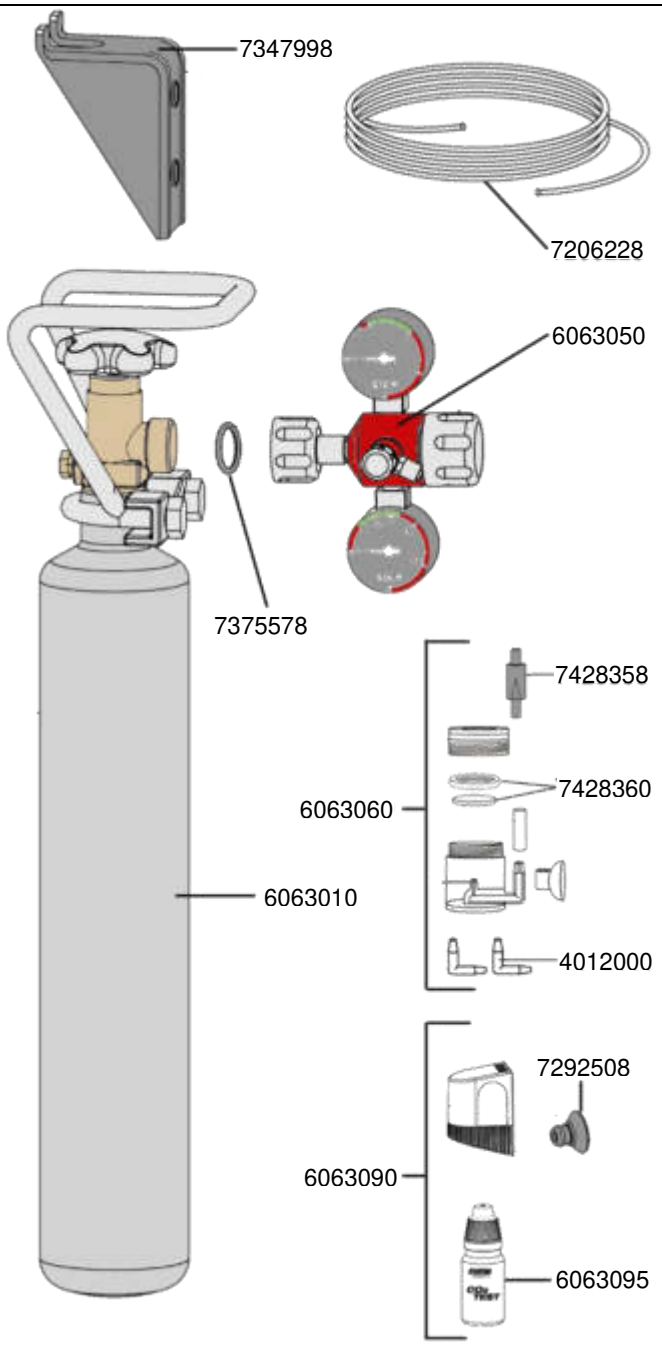

Order no.	Spare part
4012000	Elbow connector for hose-Ø 4/6 mm (2 pieces)
6063010	CO_2-bottle 500 g, reusable with cage and wall holder
6063050	CO_2-pressure reducer with two manometers for reusable bottle
6063060	CO_2-diffuser up to 400 l with integrated check valve and bubble counter, 2x elbow connector and suction cup
6063090	Set Long-term test with indicator liquid (10 ml) and 3x test stripes
6063095	Indicator liquid (10 ml) for EHEIM long-term test
7206228	CO_2- hose Ø 4/6 mm (3 m)
7292508	Suction cup (4 pieces)
7347998	Wall holder for CO_2-reusable bottle 500 g
7375578	Sealing ring (2 pieces) for pressure reducer 6063050
7428358	CO_2-check valve
7428360	Ceramic disc with gasket for CO_2 diffuser

© EHEIM, Germany

6063600 CO2Set 600

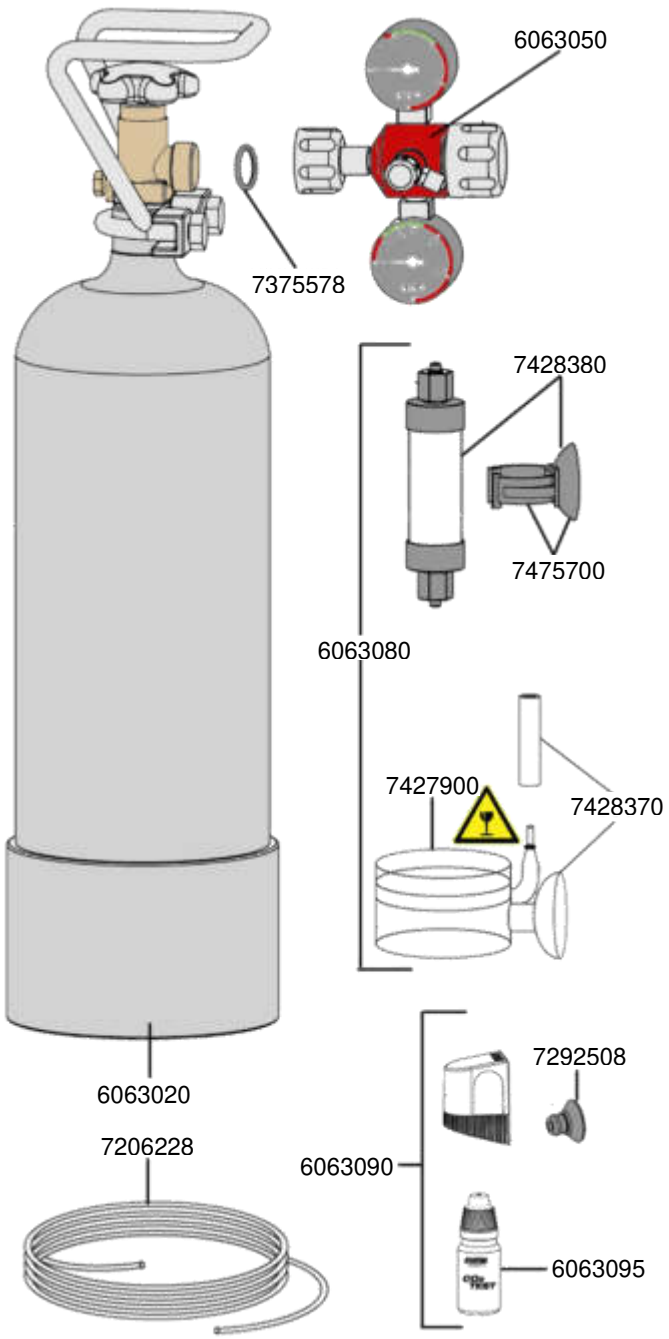

Order no.	Spare part
6063020	CO_2-bottle 2000 g, reusable with cage
6063050	CO_2-pressure reducer with two manometers for reusable bottle
6063080	CO_2-glas diffuser up to 600 l with bubble counter and integrated check valve, 3x suction cups, holder and silicon-safety hose connector
6063090	Set long-term test with indicator liquid (10 ml) and 3x test stripes
6063095	Indicator liquid (10 ml) for EHEIM long-term test
7206228	CO_2-hose Ø 4/6 mm (3 m)
7292508	Suction cup (4 pieces)
7375578	Sealing ring (2 pieces) for pressure reducer 6063050
7427990	CO_2-glas diffuser up to 600 l 2x suction cups and silicon-safety hose connector
7428370	Suction cup transparent (2 pieces) with silicon-safety hose connector for CO_2-glas diffuser
7428380	Bubble counter with integrated check valve, suction holder cpl.
7475700	Suction holder cpl.

© EHEIM, Germany

6064 CO2 night shut-off

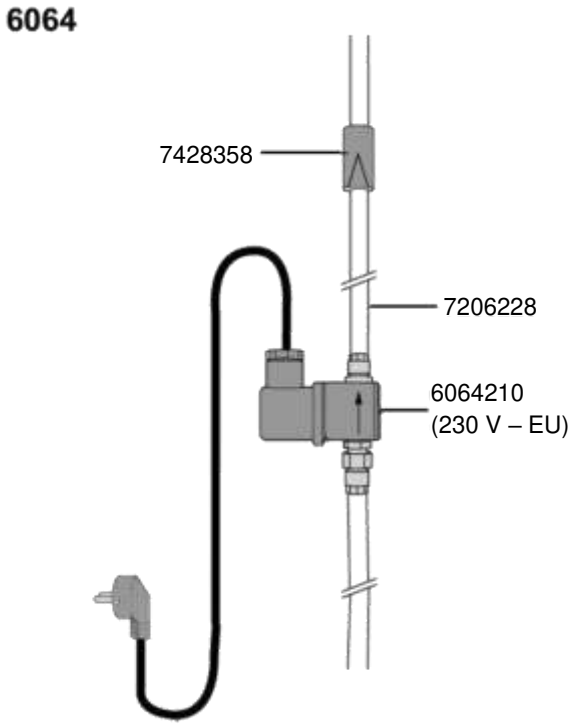

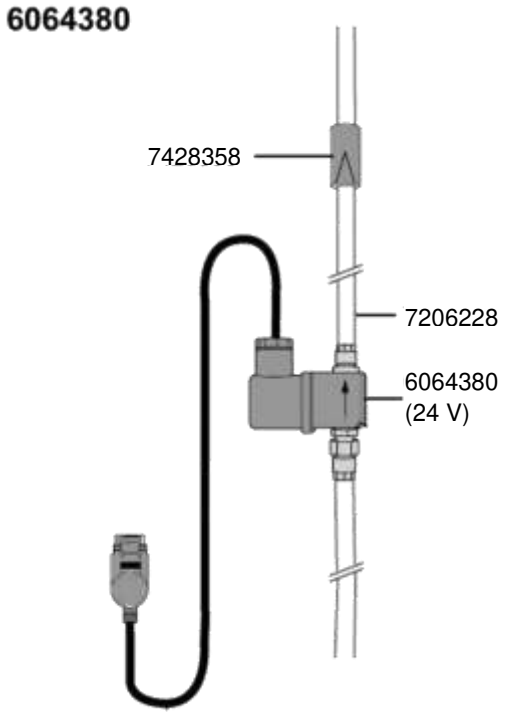

Order no.	Spare part
6064210	CO_2 night shut-off 230V / 50 Hz Europe for timer
7206228	CO_2 - hose, Ø 4/6 mm (3 m)
7428358	CO_2 – check valve

Order no.	Spare part
6064380	CO_2 night shut-off 24V / 50 Hz for **LEDcontrol**+
7206228	CO_2 - hose, Ø 4/6 mm (3 m)
7428358	CO_2 – check valve

© EHEIM, Germany

1000 Pumpe compact 300
1001 Pumpe compact 600
1002 Pumpe compact 1000

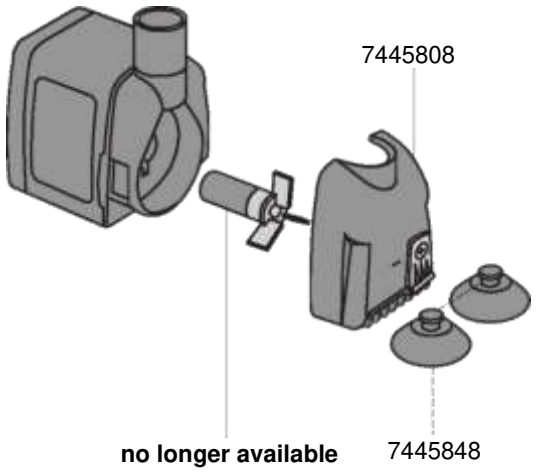

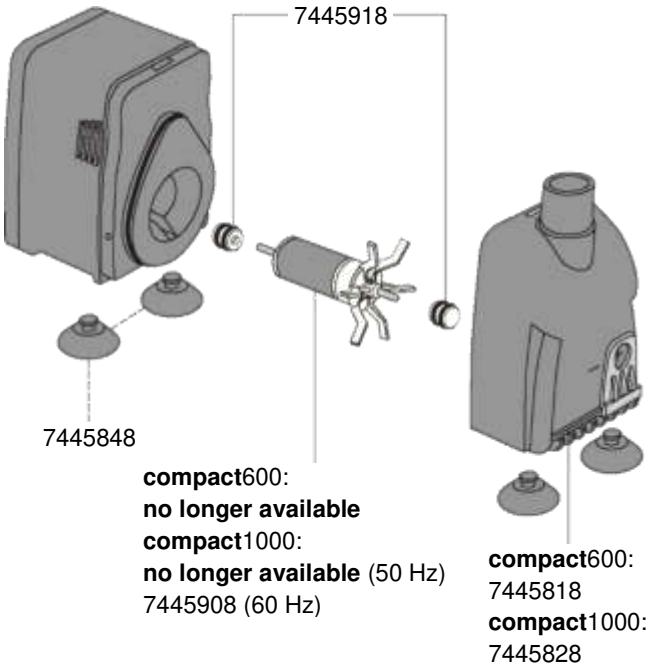

Order no.	Spare part
7445808	Pump housing complete with output regulator and protector for **compact**300 (Typ 1000)
7445848	Suction cup (4 pieces)
7445858	Impeller (50 Hz) **no longer available**
7445868	Impeller (60 Hz) **no longer available**

Order no.	Spare part
7445818	Pump housing complete with output regulator and protector for **compact**600 (Typ 1001)
7445828	Pump housing complete with output regulator and protector for **compact**1000 (Typ 1002)
7445848	Suction cup (4 pieces)
7445878	Impeller (50 Hz) for **compact**600 **no longer available**
7445888	Impeller (60 Hz) for **compact**600 **no longer available**
7445898	Impeller (50 Hz) for **compact**1000 **no longer available**
7445908	Impeller (60 Hz) for **compact**1000 **while stock lasts**
7445918	Bearings (2 pieces)

© EHEIM, Germany

1100 Pump compact+ 2000
1101 Pump compact+ 3000

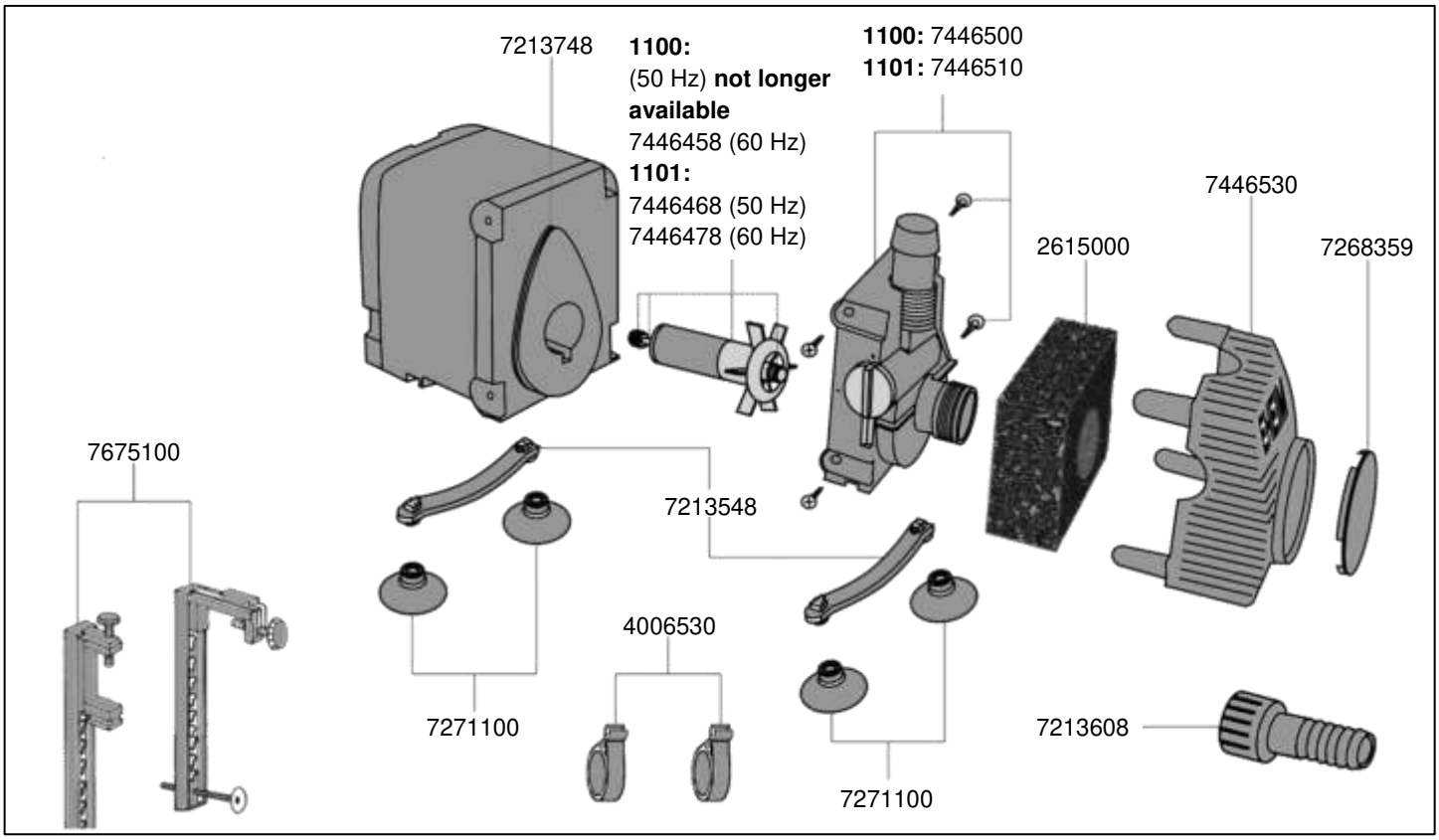

Order no.	Spare part
2615000	Coarse foam (2 pieces)
4006530	Hose clamp (2 pieces)
7213548	Attachment sleeves (2 pieces)
7213608	Threaded connector suction side
7213748	Sealing ring (2 pieces)
7268359	Cover
7271100	Suction cup (4 pieces)
7446448	**not longer available**
7446458	Impeller (60 Hz) for **compact+ 2000**, type 1100

Order no.	Spare part
7446468	Impeller (50 Hz) for **compact+ 3000**, type 1101
7446478	Impeller (60 Hz) for **compact+ 3000**, type 1101
7446500	Pump housing complete with sealing ring and 4 screws for **compact+ 2000**, type 1100
7446510	Pump housing complete with sealing ring and 4 screws for **compact+ 3000**, type 1101
7446530	Intake screen with sealing cover
7675100	Holding brackets

© EHEIM, Germany

1102 Pump compact+ 5000

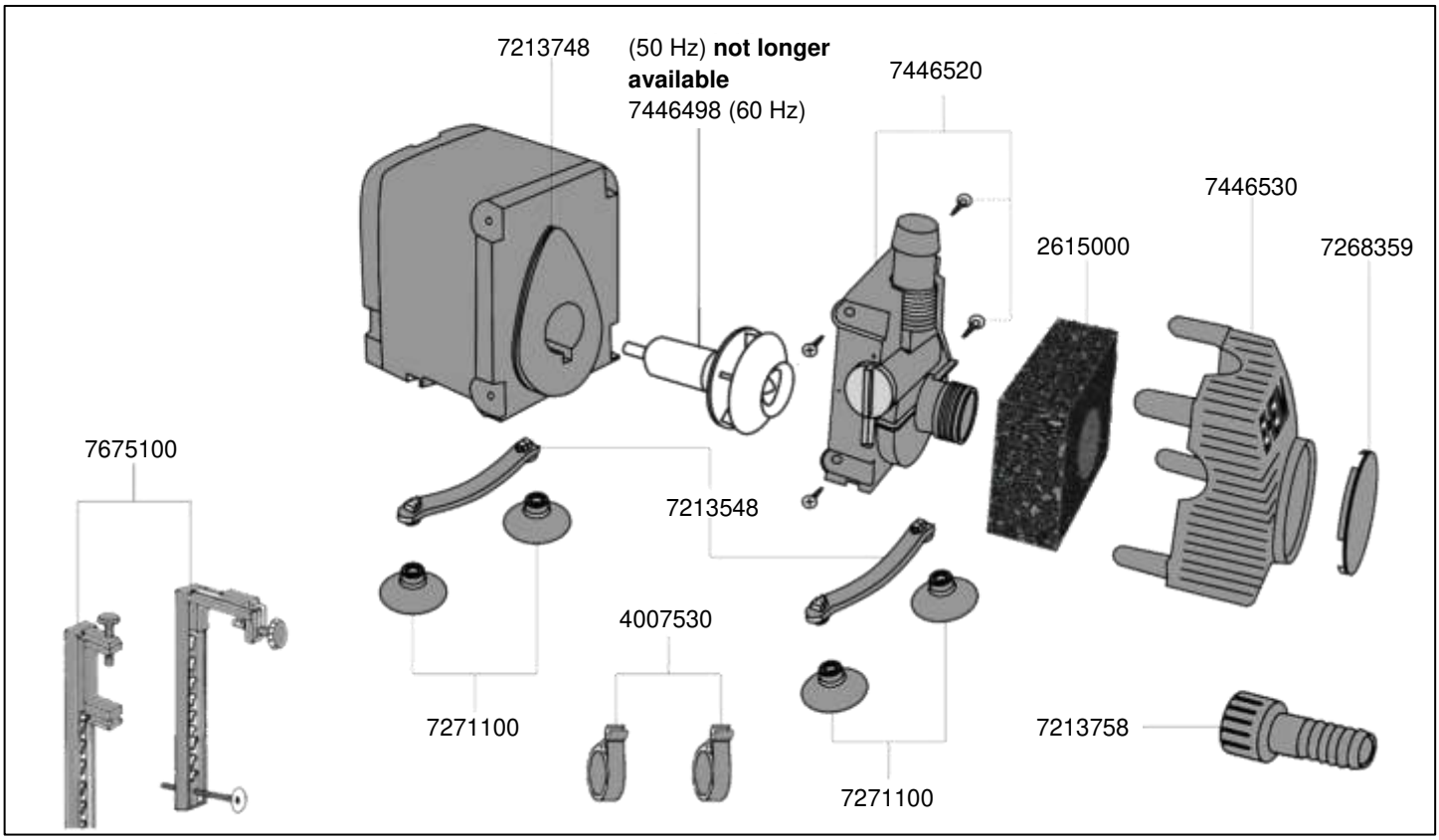

Order no.	Spare part
2615000	Coarse foam (2 pieces)
4007530	Hose clamp (2 pieces)
7213548	Attachment sleeves (2 pieces)
7213748	Sealing ring (2 pieces)
7213758	Threaded connector suction side
7268359	Cover
7271100	Suction cup (4 pieces)
7446488	**not longer available**
7446498	Impeller (60Hz) for **compact+ 5000,** type 1102

Order no.	Spare part
7446520	Pump housing complete with sealing ring and 4 screws for **compact+ 5000**, type 1102
7446530	Intake screen with sealing cover
7675100	Holding brackets

© EHEIM, Germany

1103 Pump compact+ marine

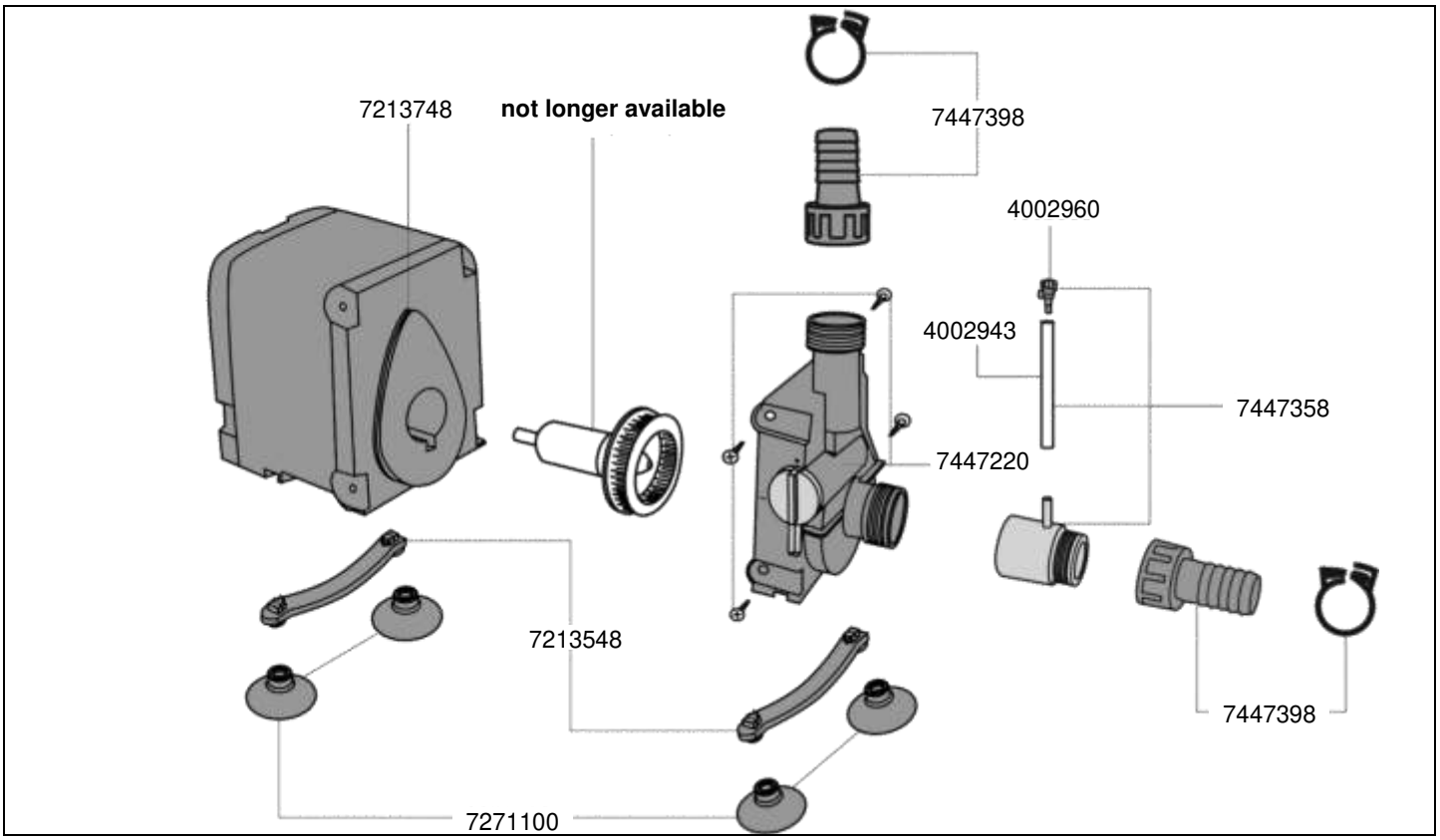

Order no.	Spare part
4002943	Hose Ø 4/6 mm (3 m)
4002960	Air regulator
7213548	Attachment sleeves (2 pieces)
7213748	Sealing ring (2 pieces)
7271100	Suction cup (4 pieces)

Order no.	Spare part
7447218	**not longer available**
7447220	Pump housing complete with sealing ring and 4 screws for **compact+ marine**, type 1103
7447358	Diffuser
7447398	Threaded connector suction and side pressure side
7447448	**not longer available**

© EHEIM, Germany

1020 Pump compactON 300
1021 Pump compactON 600
1022 Pump compactON 1000
Serial no. xxxx01

compactON300, 600

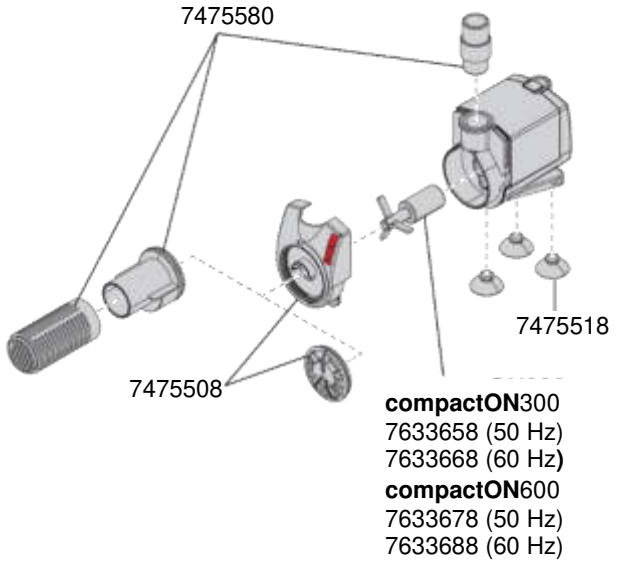

compactON1000

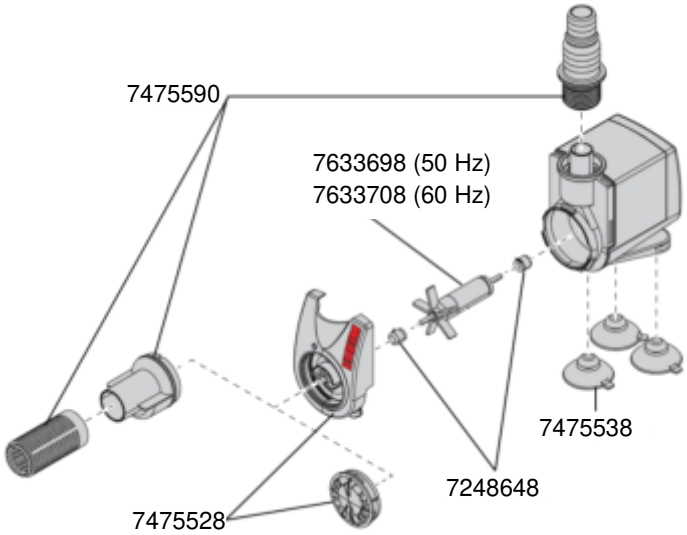

Order no.	Spare part	1020 / 1021
7475508	Pump cover complete with output regulator	
7475518	Suction cups (4 pieces)	
7475580	Connection set consisting of inlet strainer, connection-piece und threaded connector	
7633658	Impeller (50 Hz) **compactON**300, type 1020	
7633668	Impeller (60 Hz) **compactON**300, type 1020	
7633678	Impeller (50 Hz) **compactON**600, type 1021	
7633688	Impeller (60 Hz) **compactON**600, type 1021	

Order no.	Spare part	1022
7248648	Bearings (2 pieces)	
7475528	Pump cover complete with output regulator	
7475538	Suction cups (4 pieces)	
7475590	Connection set consisting of inlet strainer, connection-piece und threaded connector	
7633698	Impeller (50 Hz) **compactON**1000, type 1022	
7633708	Impeller (60 Hz) **compactON**1000, type 1022	

© EHEIM, Germany

1030 Pump compactON 2100
1031 Pump compactON 3000
Serial no. xxxx01

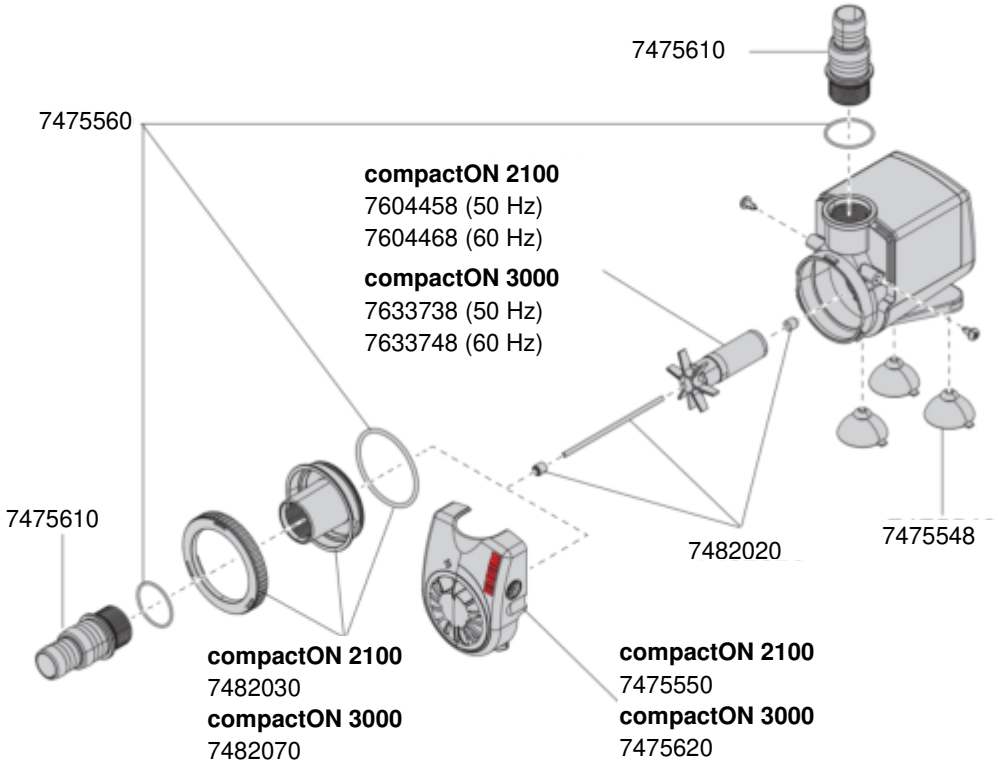

Order no.	Spare part
7475548	Suction cups (4 pieces)
7475550	Pump cover complete with output regulator and 2 screws **compactON** 2100, type 1030 (underwater operation)
7475560	Set sealing rings, 1x for pump cover 2x for threaded connector
7475610	Threaded connector G 3/4“ pressure- or suction side for hose-Ø 19/27 mm (3/4“) or Ø 25/34 mm (1“)
7475620	Pump cover complete with output regulator and 2 screws **compactON** 3000 type 1031 (underwater operation)
7482020	Ceramic-Shaft with bushings

Order no.	Spare part
7482030	Pump cover complete with holding ring and sealing ring for **compactON** 2100, type 1030 (Operating outside water)
7482070	Pump cover complete with holding ring and sealing ring for **compactON** 3000, type 1031 (Operating outside water)
7604458	Impeller (50 Hz) **compactON** 2100, type 1030
7604468	Impeller (60 Hz) **compactON** 2100, type 1030
7633738	Impeller (50 Hz) **compactON** 3000, type 1031
7633748	Impeller (60 Hz) **compactON** 3000, type 1031

© EHEIM, Germany

1020 Pump compactON 300
1021 Pump compactON 600
1022 Pump compactON 1000
from serial no. xxxx02

compactON 300, 600

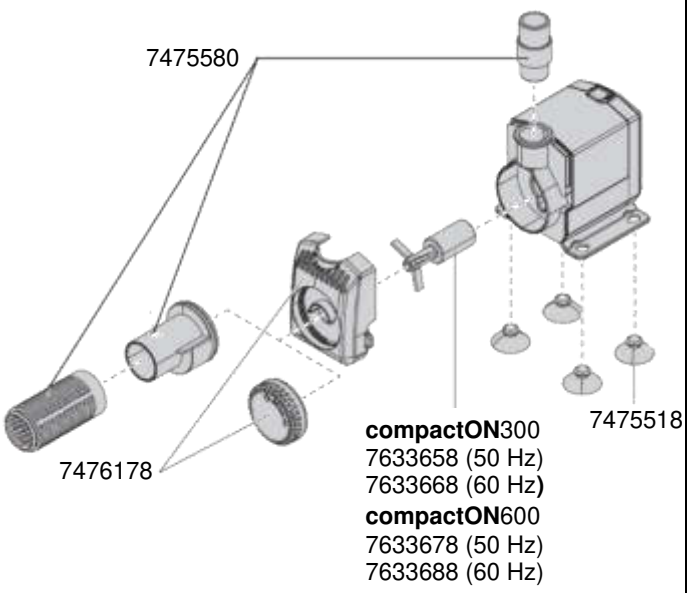

compactON 1000

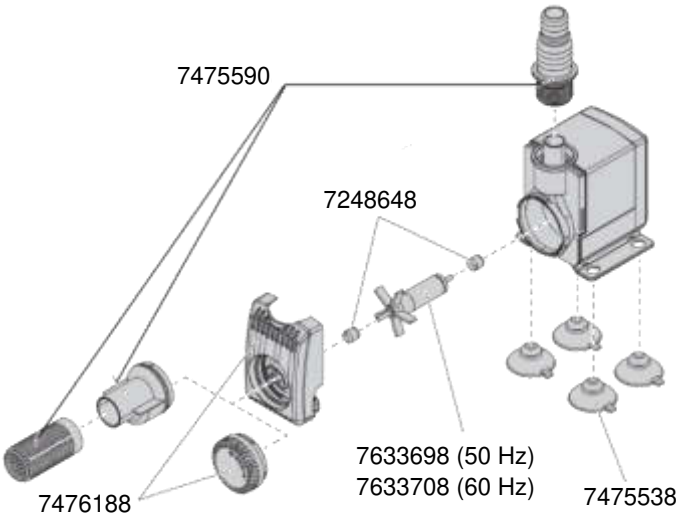

Order no.	Spare part	1020 / 1021
7476178	Pump cover complete with output regulator	
7475518	Suction cups (4 pieces)	
7475580	Connection set consisting of inlet strainer, connection-piece und threaded connector	
7633658	Impeller (50 Hz) **compactON**300, type 1020	
7633668	Impeller (60 Hz) **compactON**300, type 1020	
7633678	Impeller (50 Hz) **compactON**600, type 1021	
7633688	Impeller (60 Hz) **compactON**600, type 1021	

Order no.	Spare part	1022
7248648	Bearings (2 pieces)	
7476188	Pump cover complete with output regulator	
7475538	Suction cups (4 pieces)	
7475590	Connection set consisting of inlet strainer, connection-piece und threaded connector	
7633698	Impeller (50 Hz) **compactON**1000, type 1022	
7633708	Impeller (60 Hz) **compactON**1000, type 1022	

© EHEIM, Germany

1030 Pump compactON 2100
1031 Pump compactON 3000
from serial no. xxxx02

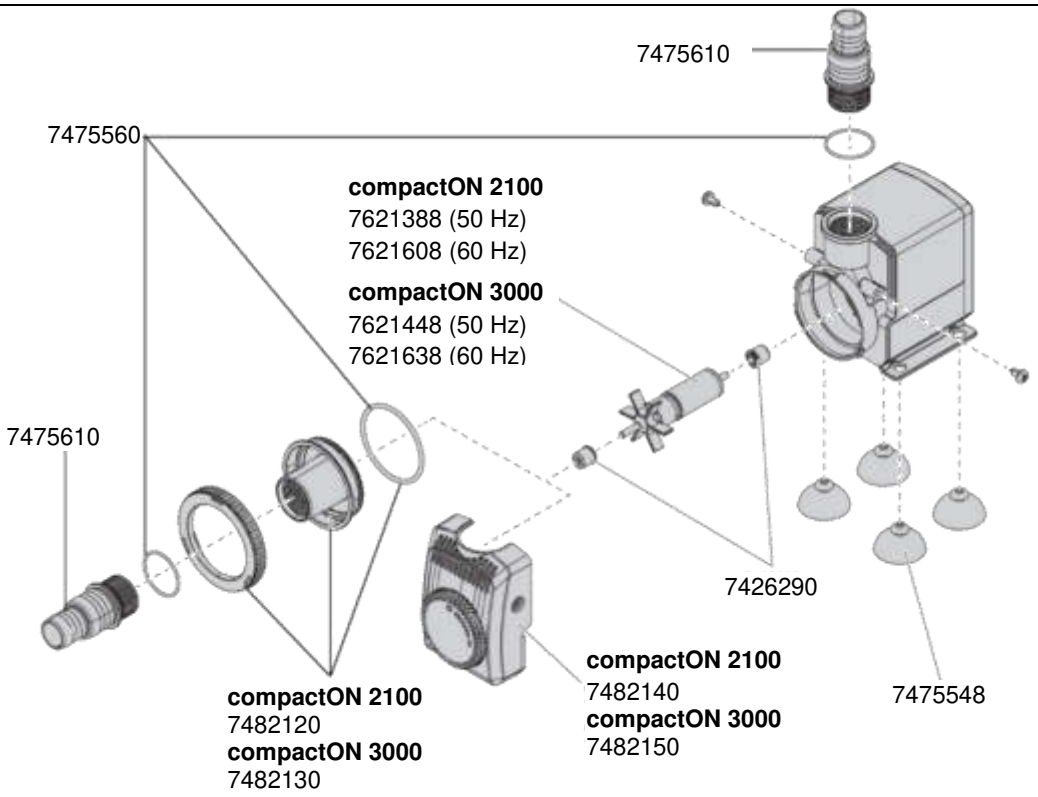

Order no.	Spare part
7426290	Ceramic bearing bushes with rubber dampers (2 pieces)
7475548	Suction cups (4 pieces)
7475560	Set sealing rings, 1x for pump cover 2x for threaded connector
7475610	Threaded connector G 3/4“ pressure- or suction side for hose-Ø 19/27 mm (3/4“) or Ø 25/34 mm (1“)
7482120	Pump cover complete with holding ring and sealing ring for **compactON**2100, type 1030 (Operating outside water)
7482130	Pump cover complete with holding ring, and sealing ring for **compactON**3000, type 1031 (Operating outside water)

Order no.	Spare part
7482140	Pump cover complete with output regulator and 2 screws **compactON**2100, type 1030 (underwater operation)
7482150	Pump cover complete with output regulator and 2 screws **compactON**3000 type 1031 (underwater operation)
7621388	Impeller (50 Hz) **compactON**2100, type 1030
7621608	Impeller (60 Hz) **compactON**2100, type 1030
7621448	Impeller (50 Hz) **compactON**3000, type 1031
7621638	Impeller (60 Hz) **compactON**3000, type 1031

© EHEIM, Germany

1032 Pump compactON 5000

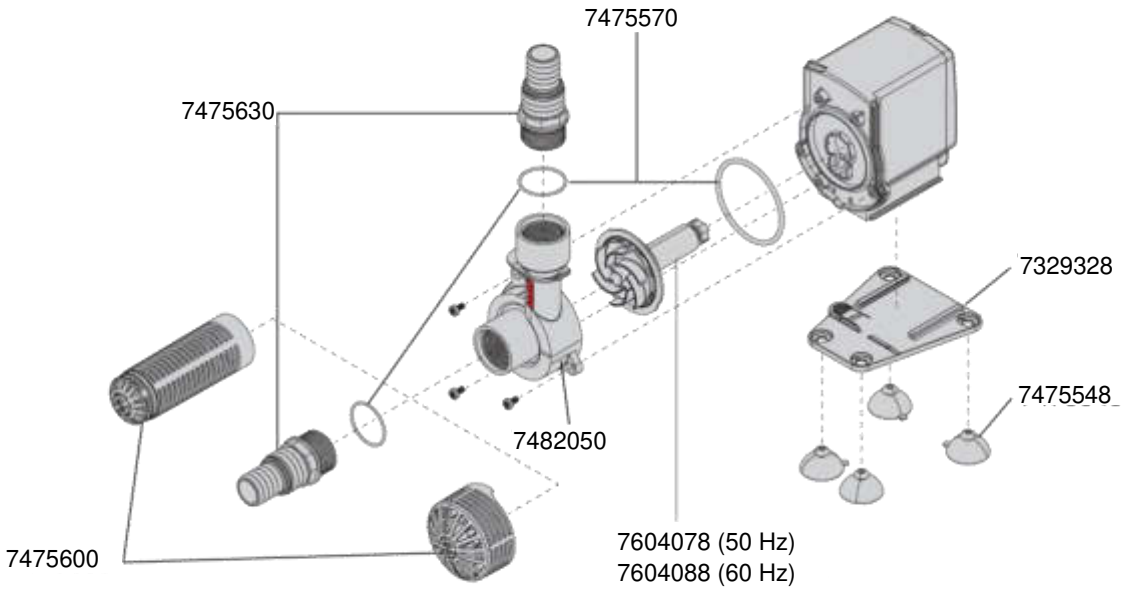

Order no.	Spare part
7329328	Mounting plate
7475548	Suction cups (4 pieces)
7475570	Set sealing rings, 1x for pump cover, 2x for threaded connector
7475600	Set inlet strainer

Order no.	Spare part
7475630	Threaded connector G 1“ pressure-or suction side for hose Ø 25/34 mm or Ø 1” / 1¼“
7482050	Pump cover complete with sealing ring and 3 screws
7604078	Impeller (50 Hz)
7604088	Impeller (60 Hz)

© EHEIM, Germany

1033 Pump compactON 9000
1034 Pump compactON 12000
1035 Pump compactON 16000

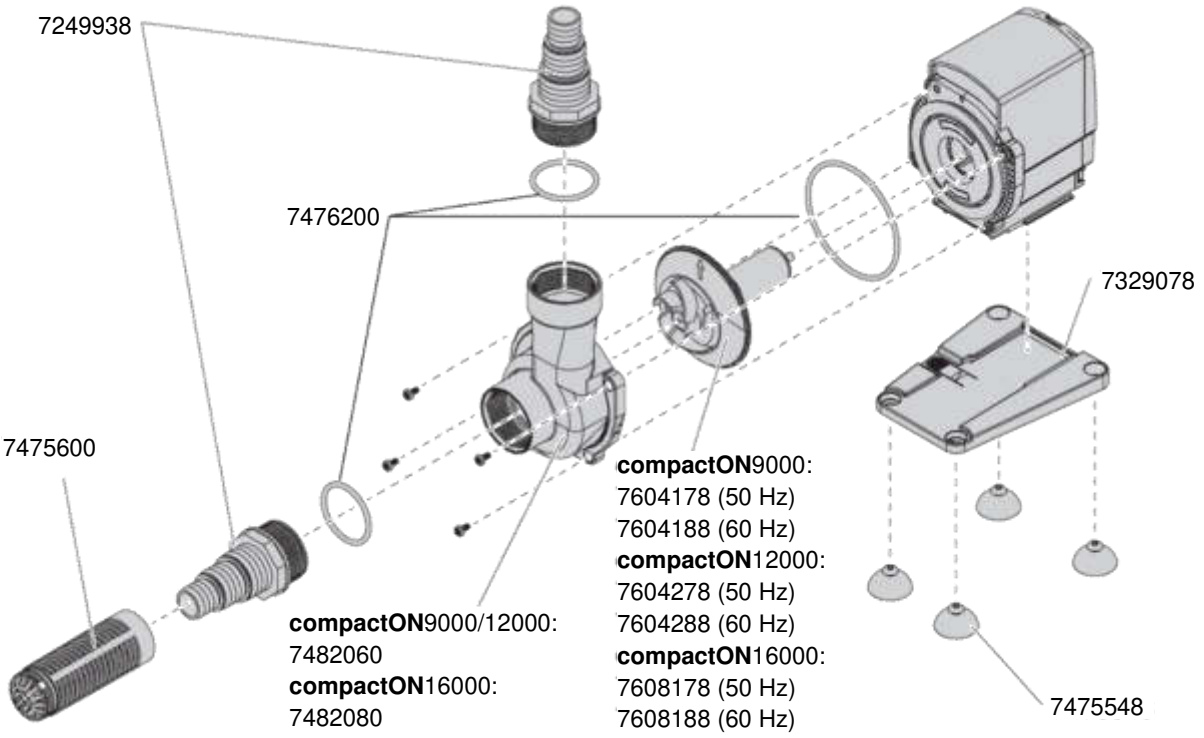

Order no.	Spare part
7249938	Threaded connector G 1½“ pressure- or suction side for hose Ø 25/34 mm or Ø 1“ / 1¼“ / 1½“
7329078	Mounting plate
7475548	Suction cups (4 pieces)
7475600	Set inlet strainer
7476200	Set sealing rings, 1x for pump cover, 2x for threaded connector
7482060	Pump cover with sealing ring and 4 screws for **compactON**9000 / 12000 (type 1033 and 1034)
7482080	Pump cover with sealing ring and 4 screws for **compactON**16000 (type 1035)

Order no.	Spare part
7604178	Impeller (50 Hz) for **compact**9000 (type 1033)
7604188	Impeller (60 Hz) for **compact**9000 (type 1033)
7604278	Impeller (50 Hz) for **compact**12000 (type 1034)
7604288	Impeller (60 Hz) for **compact**12000 (type 1034)
7608178	Impeller (50 Hz) for **compact**1600**0** (type 1035)
7608188	Impeller (60 Hz) for **compact**16000 (type 1035)

© EHEIM, Germany

1005 Pump universal 270

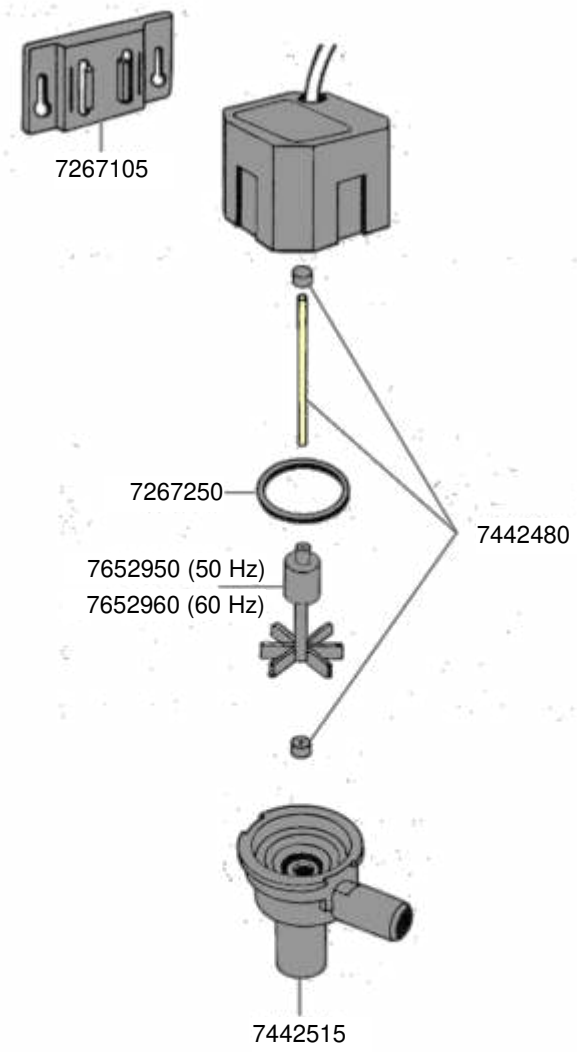

Order no.	Spare part
7267105	Mounting plate
7267250	Sealing ring (2 pieces)
7442480	Ceramic-Shaft with bushings
7442515	Cover with bushing
7652950	Impeller (50 Hz)
7652960	Impeller (60 Hz)

© EHEIM, Germany

1046 Pump universal 300

EHEIM universal 300

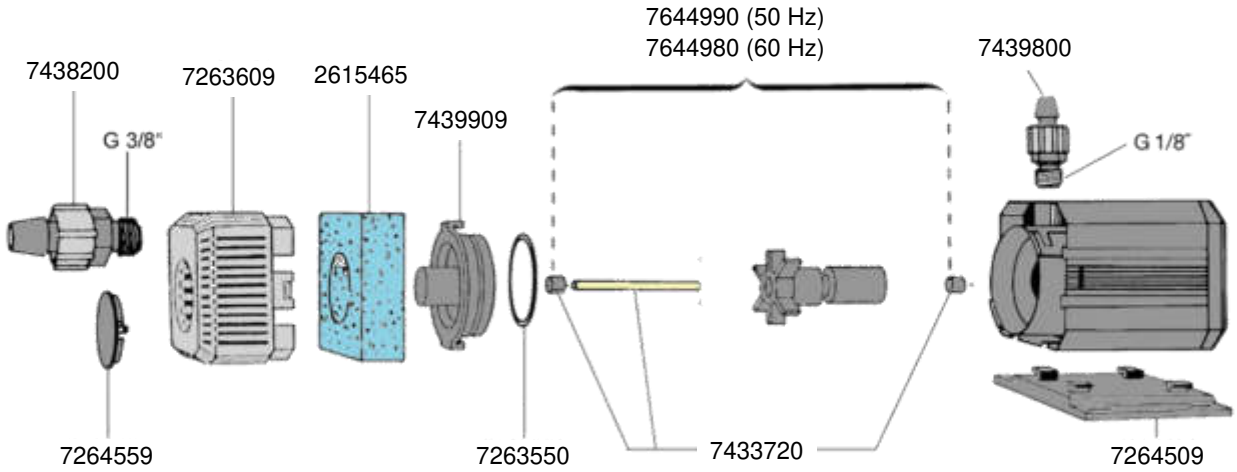

Order no.	Spare part
2615465	Coarse foam (2 pieces)
4009560	Set of cleaning brushes (not shown)
7263550	Sealing ring (2 pieces)
7263609	Intake screen
7264509	Mounting plate
7264559	Sealing cover

Order no.	Spare part
7433720	Shaft with bushings
7438200	Threaded connector suction side
7439800	Threaded connector pressure side
7439909	Pump cover with bushing
7644980	Impeller (60 Hz) with shaft and bushings
7644990	Impeller (50 Hz) with shaft and bushings

© EHEIM, Germany

1048 Pump universal 600

EHEIM universal 600

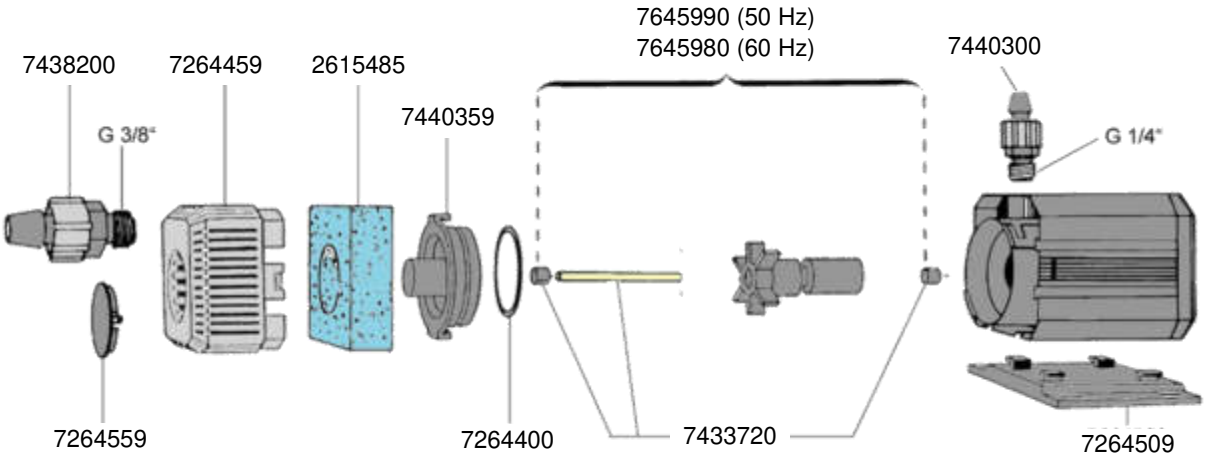

Order no.	Spare part
2615485	Coarse foam (2 pieces)
4009560	Set of cleaning brushes (not shown)
7264400	Sealing ring (2 pieces)
7264459	Intake screen
7264509	Mounting plate
7264559	Sealing cover

Order no.	Spare part
7433720	Shaft with bushings
7438200	Threaded connector suction side
7440300	Threaded connector pressure side
7440359	Pump cover with bushing
7645980	Impeller (60 Hz) with shaft and bushings
7645990	Impeller (50 Hz) with shaft and bushings

© EHEIM, Germany

1250 Pump universal 1200
1252 Pump for internal filter powerline XL
1253 Pump for external filter 2250

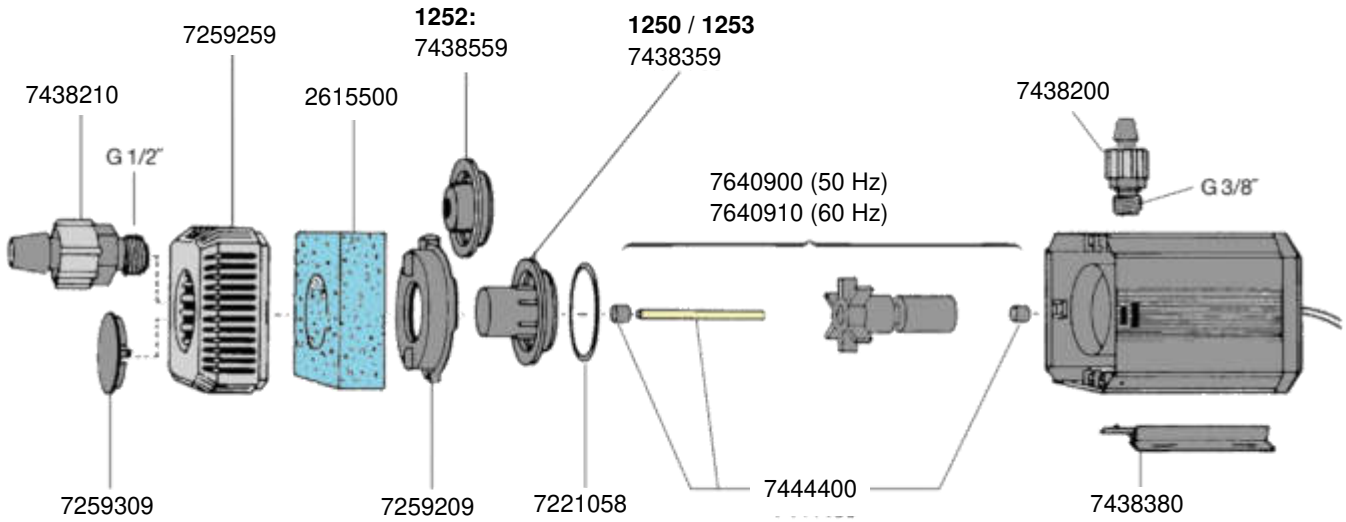

Order no.	Spare part
2615500	Coarse foam (2 pieces)
4009560	Set of cleaning brushes (not shown)
7221058	Sealing ring (2 pieces)
7259209	Holding ring
7259259	Intake screen
7259309	Sealing cover
7438200	Threaded connector suction side
7438210	Threaded connector pressure side

Order no.	Spare part
7438359	Pump cover with bushing for type 1250 and 1253
7438380	Attachment sleeves left and right and 2 panels
7438559	Pump cover with bushing for type 1252
7444400	Shaft with bushings
7640900	Impeller (50 Hz) with shaft and bushings
7640910	Impeller (60 Hz) with shaft and bushings

© EHEIM, Germany

1260 Pump universal 2400
1262 Pump universal 3400
1264 Pump universal 4500

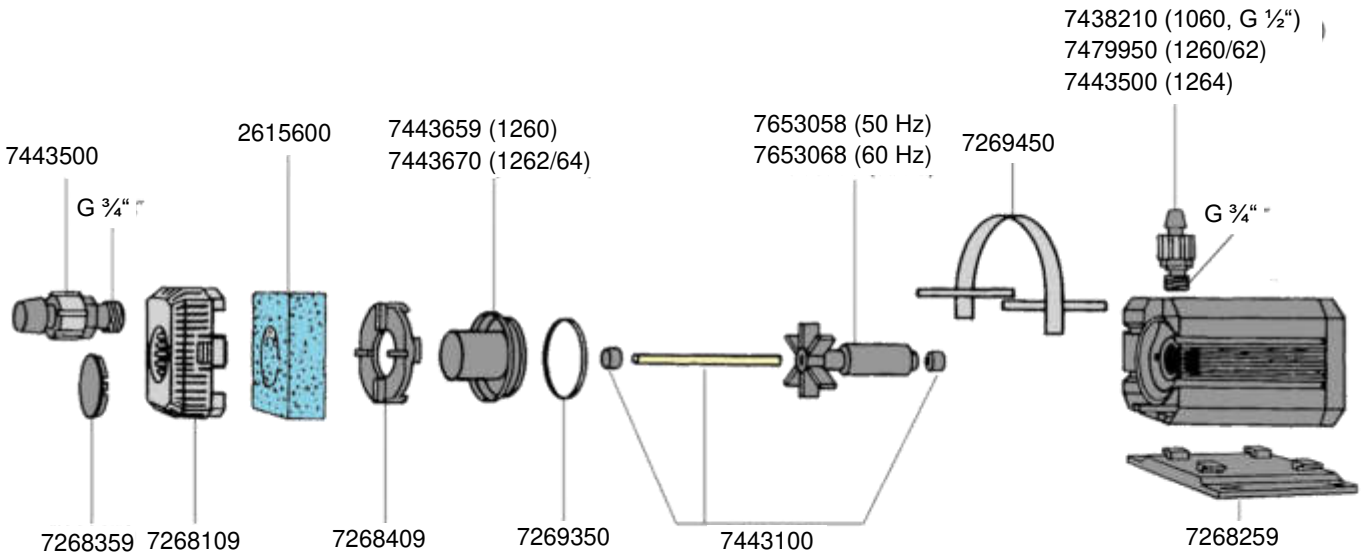

Order no.	Spare part
2615600	Coarse foam (2 pieces)
4009560	Set of cleaning brushes (not shown)
7268109	Intake screen
7268259	Mounting plate
7268359	Sealing cover
7268409	Bague de verrouillage
7269350	Sealing ring (2 pieces)
7269450	Poignée de transport
7438210	Threaded connector G ½“ pressure side for type 1060

Order no.	Spare part
7443100	Shaft with bushings
7443500	Threaded connector suction side
7443659	Pump cover with bushing for pump **universal**2400 (type 1260)
7443670	Pump cover with bushing for pump **universal** 3400 and 4500 (type 1262 and 1264)
7479950	Threaded connector pressure side for pump **universal**3400 and 4500 (type 1262 and 1264)
7653058	Impeller (50 Hz)
7653068	Impeller (60 Hz)

© EHEIM, Germany

1070 Streaming pump streamON 1800
1071 Streaming pump streamON 3000
1072 Streaming pump streamON 3800

1070

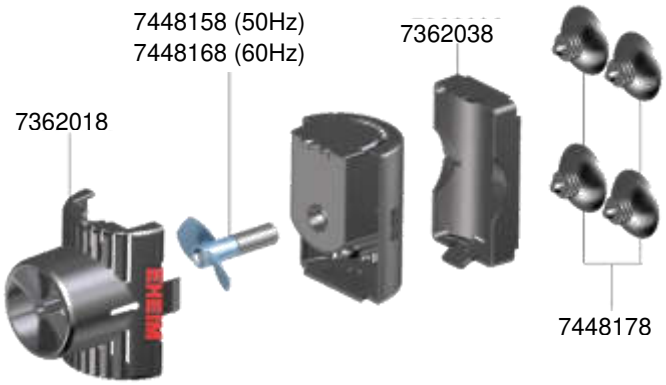

1071/1072

Order no.	Spare part	1070
7362018	Pump housing	
7362038	Pump holder	
7448158	Impeller (50 Hz) for **streamON** 1800	
7448168	Impeller (60 Hz) for **streamON** 1800	
7448178	Suction cup (4 pieces)	

Order no.	Spare part	1071/1072
7362078	Pump housing	
7362098	Pump holder	
7448178	Suction cup (4 pieces)	
7448258	Impeller (50 Hz) complete with shaft, bushings and starting disk for **streamON** 3000	
7448268	Impeller (60 Hz) complete with shaft, bushings and starting disk for **streamON** 3000	
7448358	Impeller (50 Hz) complete with shaft, bushings and starting disk for **streamON** 3800	
7448368	Impeller (60 Hz) complete with shaft, bushings and starting disk for **streamON** 3800	

© EHEIM, Germany

1080 Streaming pump streamON+ 2000
1081 Streaming pump streamON+ 4000
1082 Streaming pump streamON+ 5000

1080

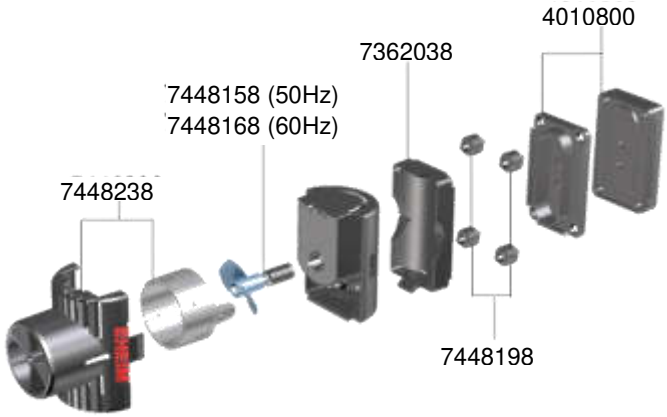

1081/1082

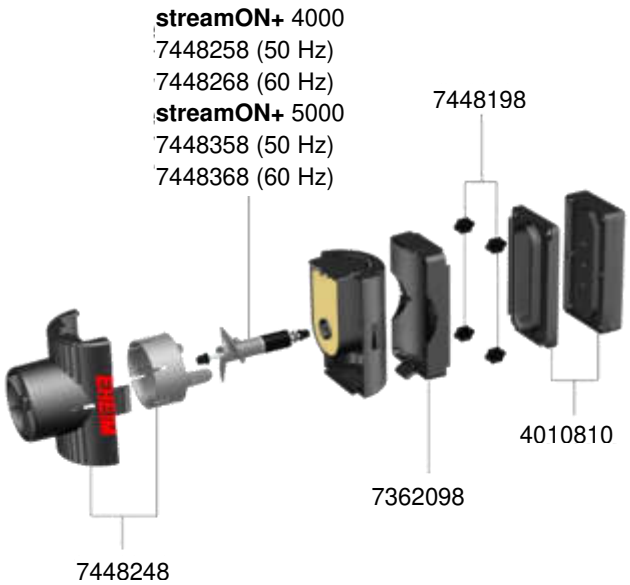

Order no.	Spare part	1080
4010800	Magnet holder complete with 4 pieces dumping buffer	
7362038	Pump holder	
7448158	Impeller (50 Hz) for **streamON**+ 2000	
7448168	Impeller (60 Hz) for **streamON**+ 2000	
7448198	Dumping buffer (4 pieces)	
7448238	Pump housing complete with output regulator	

Order no.	Spare part	1081/1082
4010810	Magnet holder complete with 4 pieces dumping buffer	
7362098	Pump holder	
7448198	Dumping buffer (4 pieces)	
7448248	Pump housing complete with output regulator	
7448258	Impeller (50 Hz) complete with shaft, bushings and starting disk for **streamON**+ 4000	
7448268	Impeller (60 Hz) complete with shaft, bushings and starting disk for **streamON**+ 4000	
7448358	Impeller (50 Hz) complete with shaft, bushings and starting disk for **streamON**+ 5000	
7448368	Impeller (60 Hz) complete with shaft, bushings and starting disk for **streamON**+ 5000	

© EHEIM, Germany

1180 Flow pump streamON+ 3500

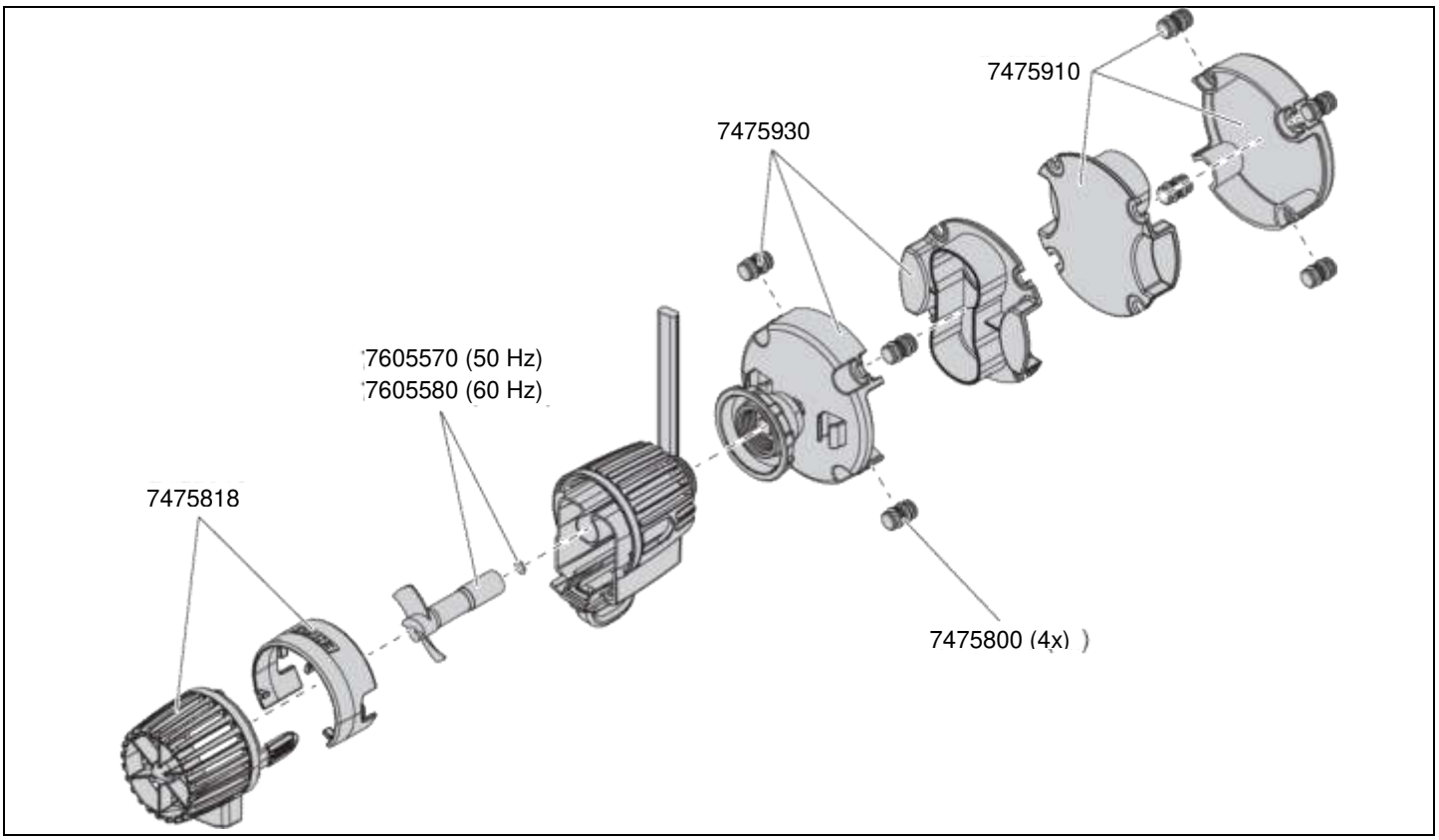

Order no.	Spare part
7475800	damping buffer (4 pieces)
7475818	Pump housing with output regulator **streamON+** 3500
7475910	Magnet holder outside complete with 4x cashions **streamON+** 3500
7475930	Magnet holder inside complete with 4x cashions **streamON+** 3500

Order no.	Spare part
7605570	Impeller (50 Hz) complete with starting disk **streamON+** 3500
7605580	Impeller (60 Hz) complete with starting disk **streamON+** 3500

© EHEIM, Germany

1181 Flow pump streamON+ 6500
1182 Flow pump streamON+ 9500

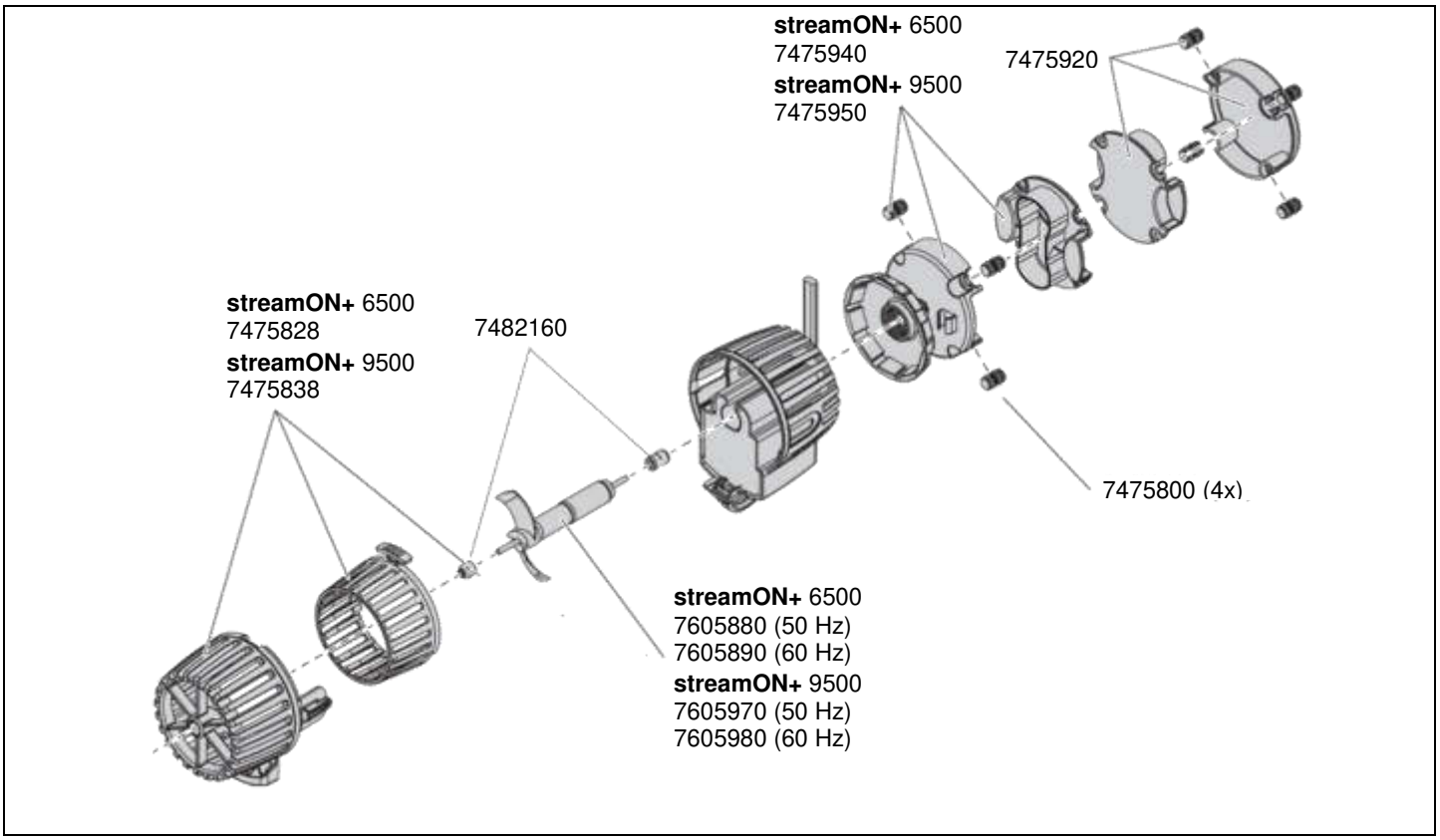

Order no.	Spare part
7475800	Cashions (4 pieces)
7475828	Pump housing complete with shaft bushing and output regulator **streamON+** 6500
7475838	Pump housing complete with shaft bushing and output regulator **streamON+** 9500
7475920	Magnet holder outside complete with 4x cashions **streamON+** 6500 and 9500
7475940	Magnet holder inside complete with 4x cashions **streamON+** 6500
7475950	Magnet holder inside complete with 4x cashions **streamON+** 9500
7482160	Set shaft bushings, 1x front, 1x rear

Order no.	Spare part
7605880	Impeller (50 Hz) complete **streamON+** 6500
7605890	Impeller (60 Hz) complete **streamON+** 6500
7605970	Impeller (50 Hz) complete **streamON+** 9500
7605980	Impeller (60 Hz) complete **streamON+** 9500

© EHEIM, Germany

5100 Water feature pump **PLAY** 1000
5101 Water feature pump **PLAY** 1500

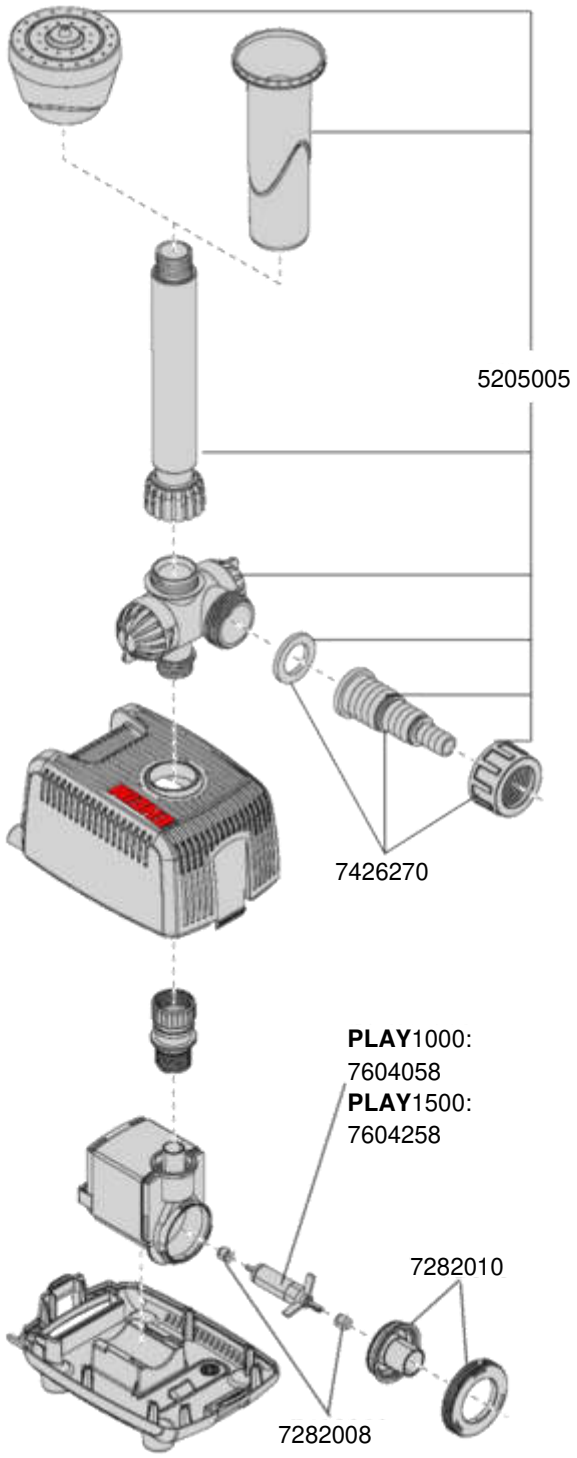

Order no.	Spare part
5205005	Nozzle set complete
7426270	Hose connector Ø ½”, ¾” and 1”
7482008	Ceramic bush with rubber dampers (2 pieces)
7482010	Pump cover complete with holding ring and sealing ring
7604058	Impeller (50Hz) **PLAY**1000, type 5100
7604258	Impeller (50Hz) **PLAY**1500, type 5101

© EHEIM, Germany

5102 Water feature pump **PLAY** 2500
5103 Water feature pump **PLAY** 3500
Serial no. xxxx01

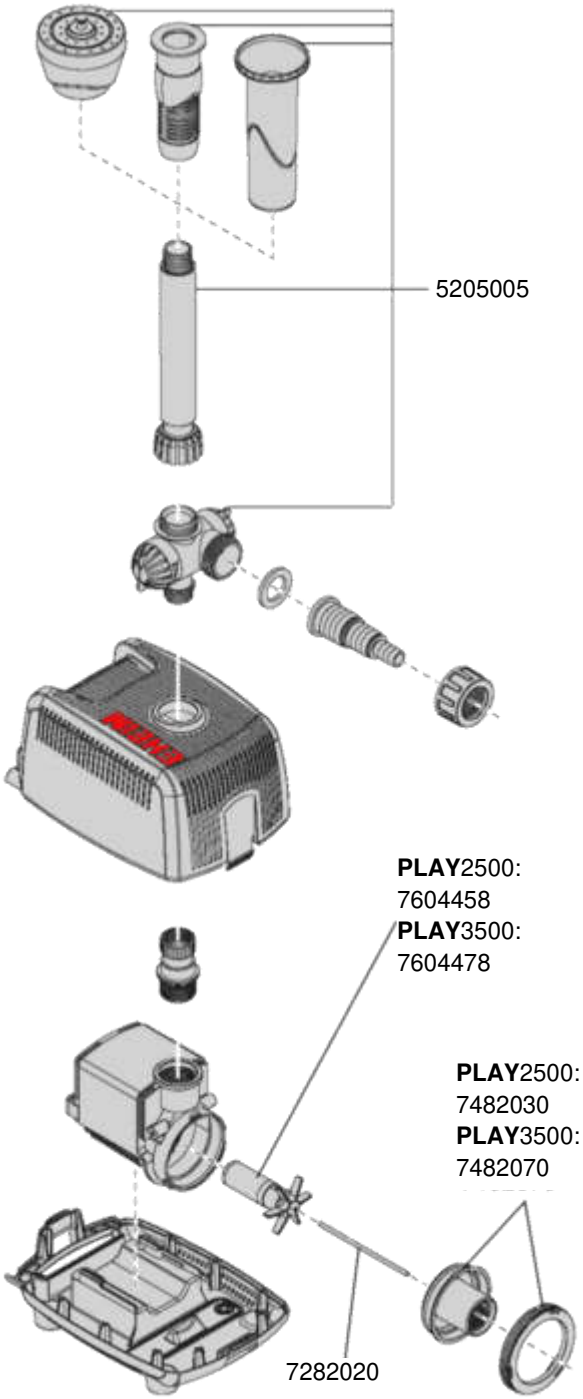

Order no.	Spare part
5205005	Nozzle set complete
7482020	Ceramic shaft with bushings
7482030	Pump cover complete with sealing ring and holding ring for **PLAY**2500, type 5102
7482070	Pump cover complete with sealing ring and holding ring for **PLAY**3500, type 5103
7604458	Impeller (50Hz) **PLAY**2500, type 5102
7604478	Impeller (50Hz) **PLAY** 3500, type 5103

© EHEIM, Germany

5102 Water feature pump **PLAY** 2500
5103 Water feature pump **PLAY** 3500
From serial no. xxxx02

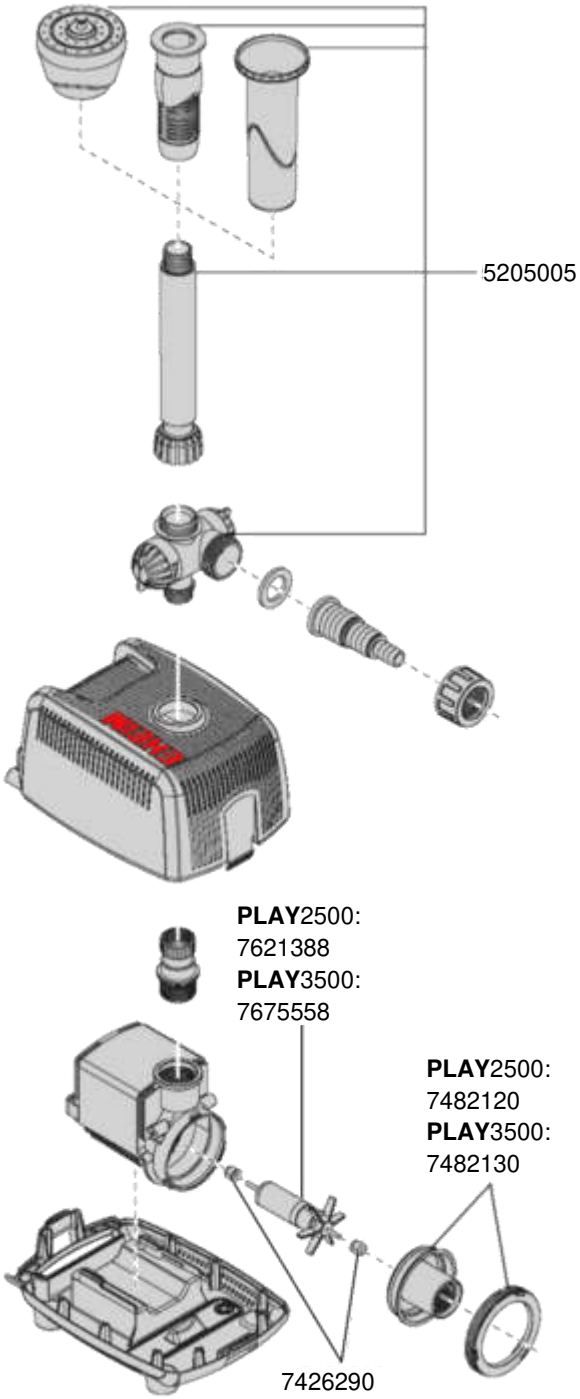

Order no.	Spare part
5205005	Nozzle set complete
7426290	Ceramic bearing bushes with rubber dampers (2 pieces)
7482120	Pump cover complete with sealing ring and holding ring for **PLAY**2500, type 5102
7482130	Pump cover complete with, sealing ring and holding ring for **PLAY**3500, type 5103
7621388	Impeller (50Hz) **PLAY**2500, type 5102
7675558	Impeller (50Hz) **PLAY** 3500, type 5103

© EHEIM, Germany

7604 Pond pump FLOW 2500
5110 Pond pump FLOW 3500
Serial no. xxxx01

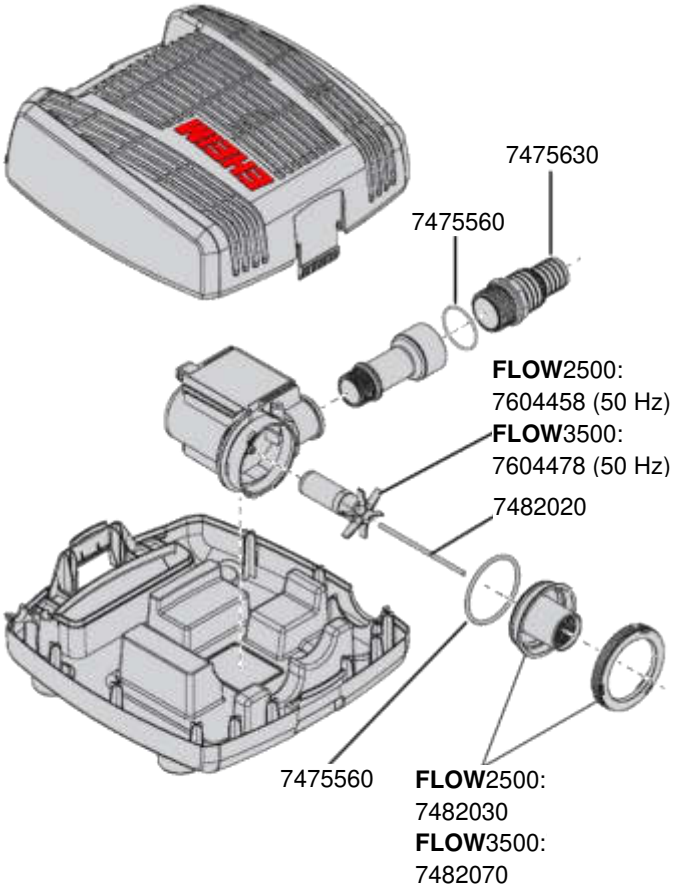

Order no.	Spare part
7475560	Set sealing rings, 1x for pump cover 2x for threaded connector
7475630	Threaded connector G 1“ for hose- Ø 25/34 mm (1“) or Ø 1 ¼”
7482020	Ceramic shaft with bushings
7482030	Pump cover with bushing, sealing ring and holding ring for **FLOW**2500, type 7604
7482070	Pump cover with bushing, sealing ring and holding ring for **FLOW** 3500, type 5110
7604458	Impeller (50Hz) for **FLOW**2500, type 7604
7604478	Impeller (50Hz) for **FLOW**3500, type 5110

© EHEIM, Germany

7604 Pond pump FLOW 2500
5110 Pond pump FLOW 3500
from serial no. xxxx02

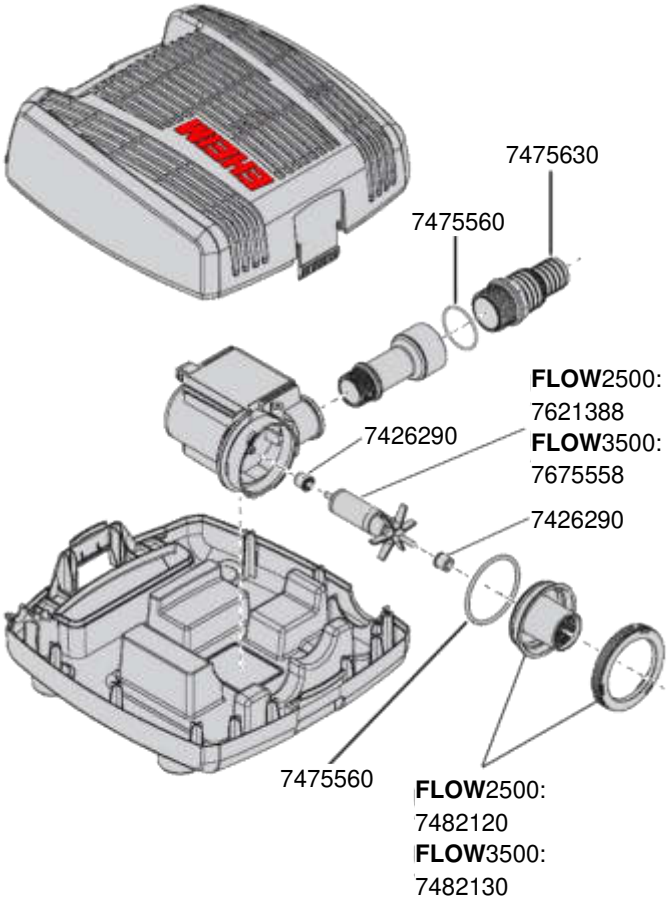

Order no.	Spare part
7426290	Ceramic bearing bushes with rubber dampers (2 pieces)
7475560	Set sealing rings, 1x for pump cover 2x for threaded connector
7475630	Threaded connector G 1“ for hose- Ø 25/34 mm (1“) or Ø 1 ¼”
7482120	Pump cover with bushing, sealing ring and holding ring for **FLOW**2500, type 7604
7482130	Pump cover with bushing, sealing ring and holding ring for **FLOW** 3500, type 5110
7621388	Impeller (50Hz) for **FLOW**2500, type 7604
7675558	Impeller (50Hz) for **FLOW**3500, type 5110

© EHEIM, Germany

5111 Pond pump FLOW 5000
5112 Pond pump FLOW 6500

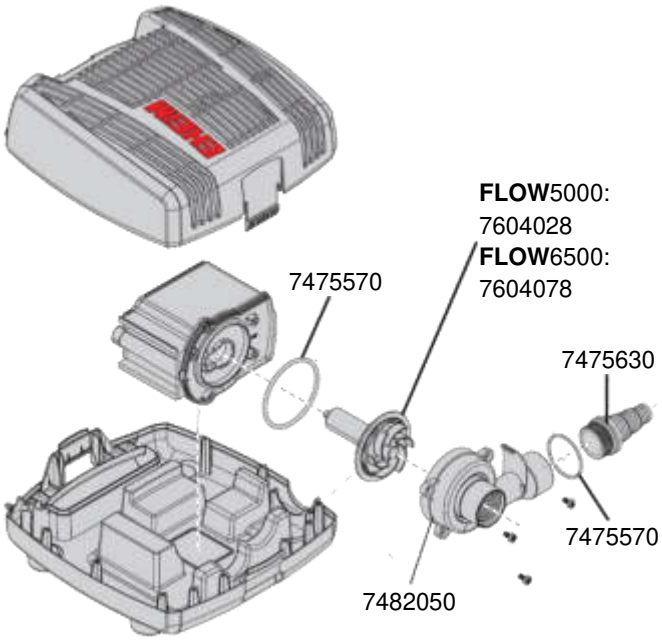

Order no.	Spare part
7475570	Set sealing rings, 1x for pump cover, 2x for threaded connector
7475630	Threaded connector G 1“ for hose Ø 25/34 mm or Ø 1” / 1¼“
7482050	Pump cover complete with sealing ring and 3 screws for **FLOW** 5000/6500 Typ 5111/5112
7604028	Impeller (50Hz) for **FLOW** 5000, Typ 5111
7604078	Impeller (50Hz) for **FLOW** 6500, Typ 5112

© EHEIM, Germany

5113 Pond pump FLOW 9000
5114 Pond pump FLOW 12000
5115 Pond pump FLOW 16000

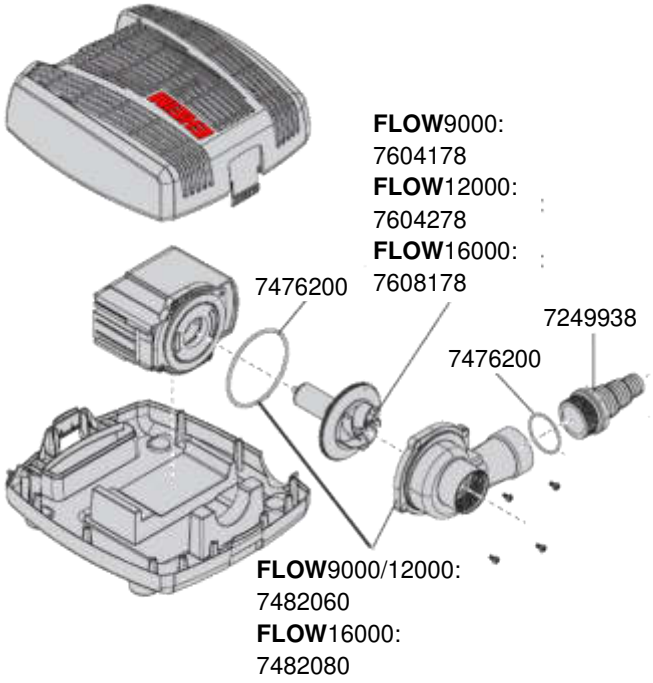

Order no.	Spare part
7249938	Threaded connector G 1 ½ “ with sealing ring for hose-Ø 1“, 1 ¼“ und 1 ½“
7476200	Set sealing rings, 1x for pump cover, 2x for threaded connector
7482060	Pump cover complete with sealing ring and 4 screws for **FLOW** 9000/12000, (type 5113/5114)
7482080	Pump cover complete with sealing ring and 4 screws for **FLOW** 16000, (type 5115)
7604178	Impeller (50Hz) for **FLOW** 9000 (type 5113)
7604278	Impeller (50Hz) for **FLOW** 12000, (type 5114)
7608178	Impeller (50Hz) for **FLOW** 16000, (type 5115)

© EHEIM, Germany

5200 Flow-through filter LOOP 5000
5201 Flow-through filter LOOP 7000

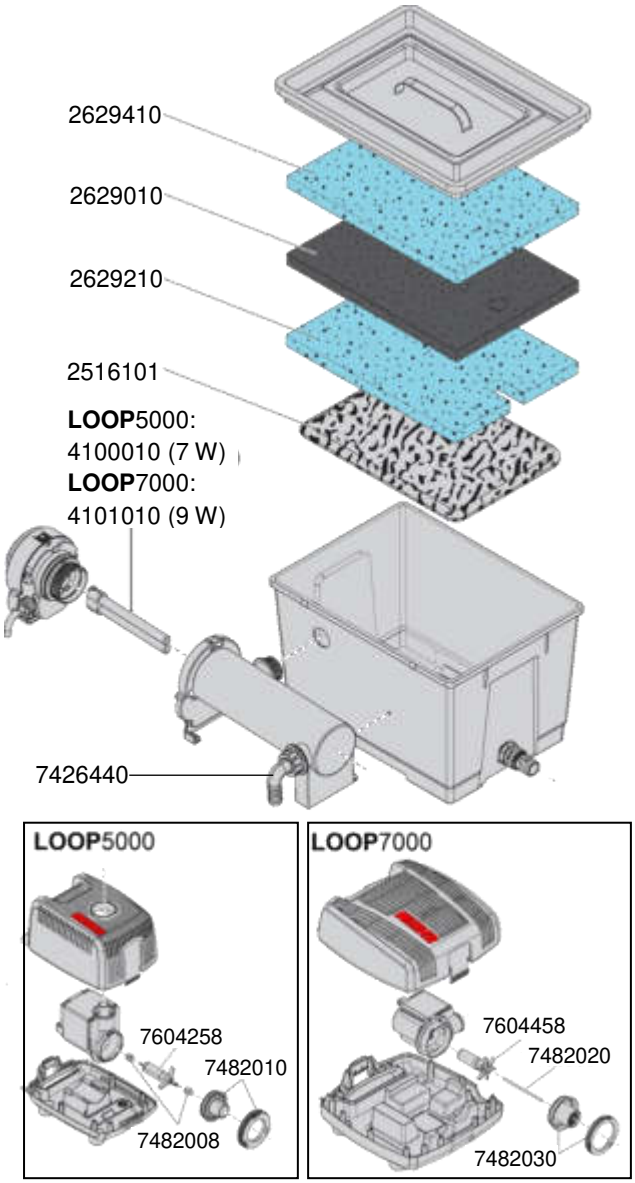

Order no.	Spare part
2516101	Filtermaterial **FILTER**BIO (2,0 l)
2629010	Adsorptive Filtermatte **REFINE**COAL
2629210	Fein-Filtermatte **REPLAY**FINE (2 Stück)
2629410	Grob-Filtermatte **REPLAY**RAW (2 Stück)
4100010	UVC-Lampe **GLOW**UVC7 (7 Watt) für **LOOP**5000
4101010	UVC-Lampe **GLOW**UVC9 (9 Watt) für **LOOP**7000
7426440	Hose connector 90° transparent for Hose-Ø ¾“ with Union nut and flat gasket
7482008	Ceramic bush with dampening rubber (2 pieces) for **LOOP**5000
7482010	Pump cover with ceramic bush, sealing ring and locking ring for **LOOP**5000
7482020	Ceramic shaft with bushings for **LOOP**7000
7482030	Pump cover with bushing, sealing ring and locking ring for **LOOP**7000
7604258	Impeller (50Hz) with ceramic shaft for **LOOP**5000
7604458	Impeller (50Hz) for **LOOP**7000

© EHEIM, Germany

5202 Flow-through filter LOOP 10000
5203 Flow-through filter LOOP 15000

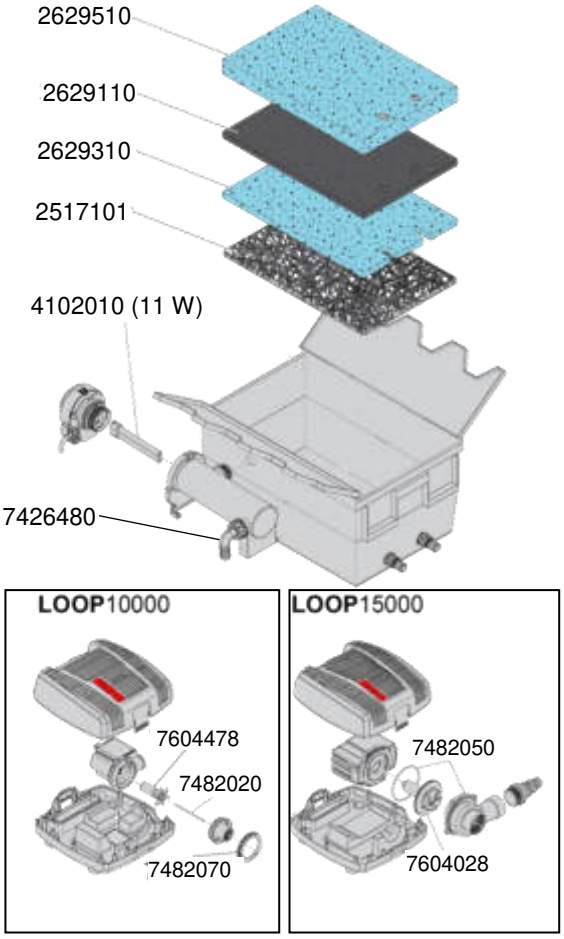

Order no.	Spare part
2517101	Filter media **FILTER**MEC (2,0 l)
2629110	Adsorptive filter pad **REFINE**COAL
2629310	Fine filter pads **REPLAY**FINE (2 Stück)
2629510	Filter pads **REPLAY**RAW (2 Stück)
4102010	UVC-lamp **GLOW**UVC11 (11 Watt, **2G7**)
7426480	Hose connector 90° transparent for Hose-Ø 1“ with Union nut and flat gasket
7482020	Ceramic shaft with bushings for **LOOP**10000
7482050	Pump housing complete with sealing ring and 3x screws for **LOOP**15000
7482070	Pump cover with bushing, sealing ring and locking ring for **LOOP**10000
7604028	Impeller (50Hz) for **LOOP**15000
7604478	Impeller (50Hz) for **LOOP**10000

© EHEIM, Germany

Internal pond filter MODUL 4000

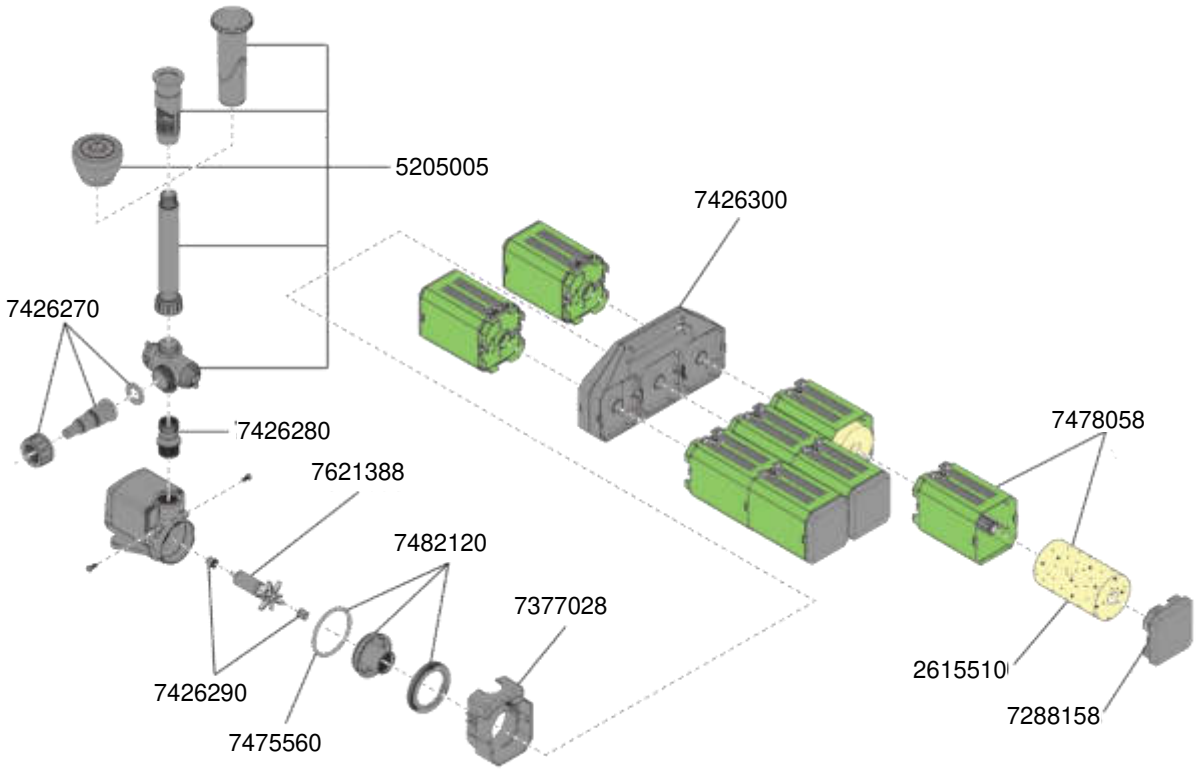

Order no.	Spare part
5205005	Nozzle set complete with each 1x nozzle DANCE, BUBBLE and SPLASH
2615510	Filter cartridge (2 pieces)
7288158	Filter bottom
7377028	Connecting adapter for pump
7426270	Hose connector for hose-Ø. ½“, ¾“ und 1“, clamp ring and gasket

Order no.	Spare part
7426280	Adapter with sealing ring
7426290	Ceramic bush with rubber support (2 pieces)
7426300	Connection part
7482120	Pump cover with clamp ring and sealing ring
7475560	Set gasket
7478058	Extension set Filterbody with cartridge
7621388	Impeller (50 Hz)

© EHEIM, Germany

5215 Flow-through filter LOOPpro 6000
5216 Flow-through filter LOOPpro 8000

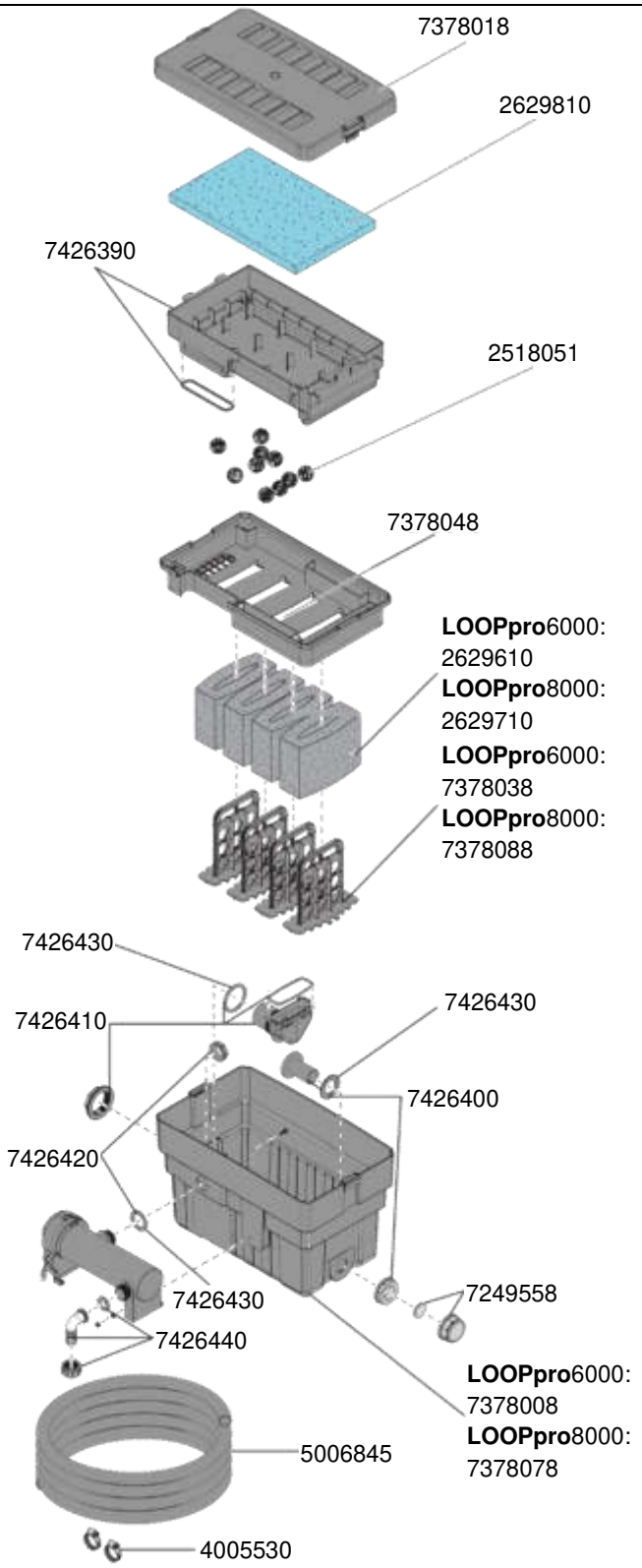

Order no.	Spare part
2518051	EHEIM bioBalls (55 pieces)
2629610	Filter sponge for **LOOPpro**6000, type 5215 (2 pieces)
2629710	Filter sponge for **LOOPpro**8000, Typ 5216 (2 pieces)
2629810	Pre-filter pad (2 pieces)
4005530	Hose clamp for Spiral hose Ø ¾“ (2 pieces)
5006845	Spiral hose Ø ¾“ x 5 m
7249558	Closing cap with gasket
7378008	Filter canister for **LOOPpro**6000, type 5215
7378018	Canister lid
7378038	Holder for filter sponge **LOOPpro**6000, type 5215
7378048	Filter media container
7378078	Filter canister for **LOOPpro**8000, type 5216
7378088	Holder for filter sponge **LOOPpro**8000, type 5216
7426390	Prefilter container with sealing ring
7426400	Backwash nozzle with union nut and flat gasket
7426410	Outlet funnel with union nut and sealing ring
7426420	Union nut with sealing ring
7426430	Set of flat gasket and sealing ring
7426440	Hose connector 90° transparent for Hose-Ø ¾“ with Union nut and flat gasket

© EHEIM, Germany

5210 Pressure filter PRESS 7000
5212 Pressure filter PRESS 7000 with CLEARUVC9

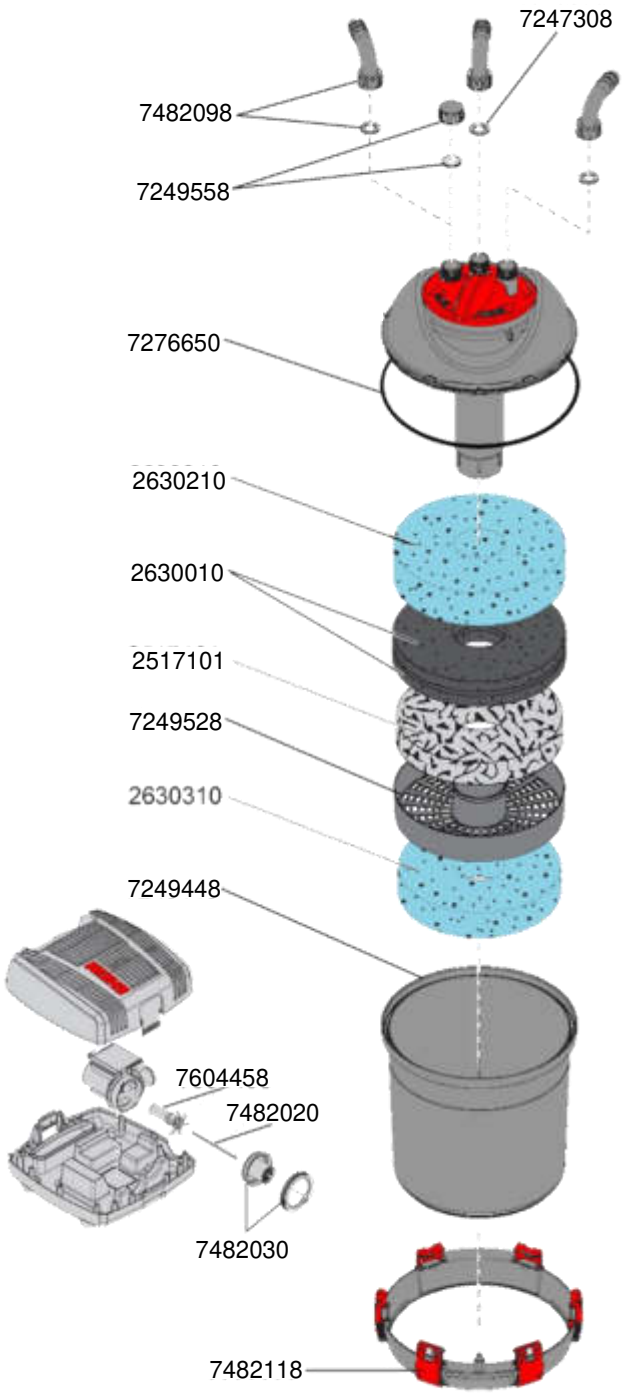

Order no.	Spare part
2517101	Filter material **FILTER**MEC (2,0 l)
2630010	Adsorptive filter pad **REFINE**COAL
2630210	Fine filter pad **REPLAY**FINE (2 pieces)
2630310	Filter pad **REPLAY**RAW (2 pieces)
7247308	Set gasket 3x for Hose connector
7249448	Filter canisterr
7249528	Filter media container
7249558	Closing cap with gasket
7276650	Sealing ring
7482098	Hose connector 90° complete for hose-Ø 1“
7482118	Clambing ring with clips
7482020	Ceramic-shaft with bushings
7482030	Pump cover with bushing, sealing ring and locking ring
7604458	Impeller (50Hz)

© EHEIM, Germany

5211 Pressure filter PRESS 10000
5213 Pressure filter PRESS 10000 with CLEARUVC11

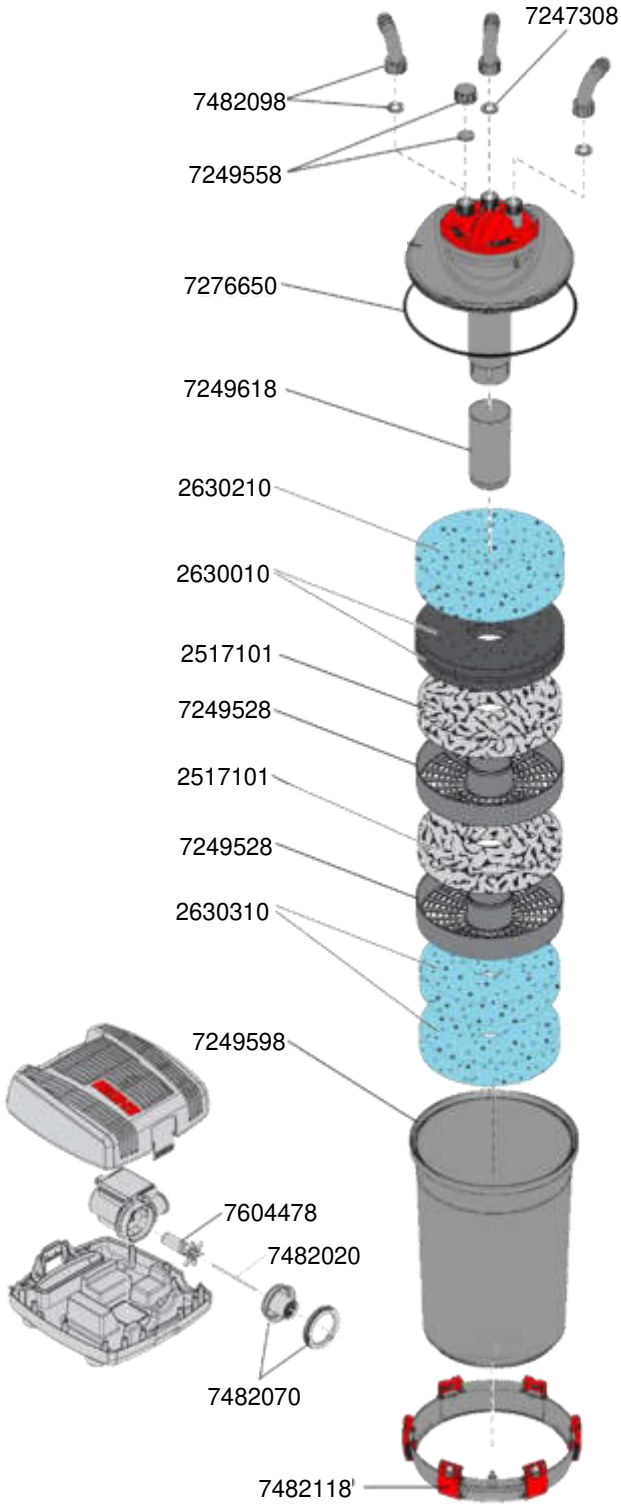

Order no.	Spare part
2517101	Filter material **FILTER**MEC (2,0 l)
2630010	Adsorptive filter pad **REFINE**COAL
2630210	Fine filter pad **REPLAY**FINE (2 pieces)
2630310	Filter pad **REPLAY**RAW (2 pieces)
7247308	Set gasket 3x for Hose connector
7249528	Filter media container
7249558	Closing cap with gasket
7249598	Filter canister
7249618	Extension tube
7276650	Sealing ring
7482098	Hose connector 90° complete for hose-Ø 1“
7482118	Clip
7482020	Ceramic-shaft with bushings
7482070	Pump cover with bushing, sealing ring and locking ring
7604478	Impeller (50Hz)

© EHEIM, Germany

5300 UVC clarifier **CLEAR**UVC 7
5301 UVC clarifier **CLEAR**UVC 9
5302 UVC clarifier **CLEAR**UVC 11
5303 UVC clarifier **CLEAR**UVC 18

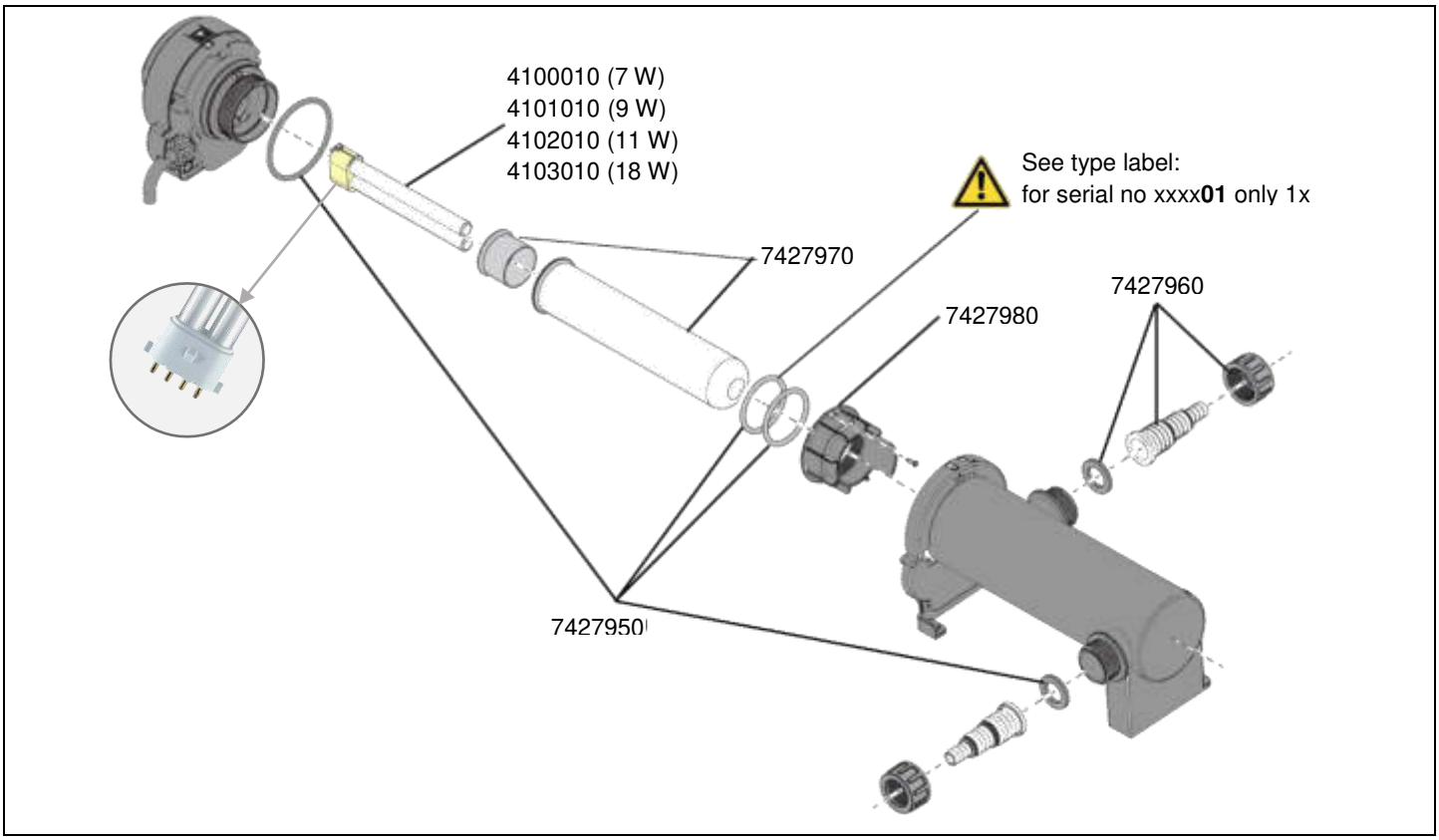

Order no.	Spare part
4100010	UVC-Spare lamp **GLOW**UVC 7 (7 Watt, **2G7**) for **CLEAR**UVC 7, type 5300
4101010	UVC-Spare lamp **GLOW**UVC 9 (9 Watt, **2G7**) for **CLEAR**UVC 9, type 5301
4102010	UVC-Spare lamp **GLOW**UVC 11 (11 Watt, **2G7**) for **CLEAR**UVC 11, type 5302
4103010	UVC-Spare lamp **GLOW**UVC 18 (18 Watt, **2G11**) for **CLEAR**UVC 18, type 5303

Order no.	Spare part
7427950	Set sealing rings consisting of: 1x for housing 2x for quartz tube **For serial no. xxxx01 only 1 piece** 2x for hose connector
7427960	Hose connector transparent for hose-Ø 1/2“,3/4“ and 1“, clamp ring and gasket
7427970	Quartz tube with reflector plate
7427980	Clamp ring and safety screw for Quartz tube

© EHEIM, Germany

5304 UVC- clarifier **CLEAR**UVC 24
5305 UVC- clarifier **CLEAR**UVC 36
5306 UVC- clarifier **CLEAR**UVC 60

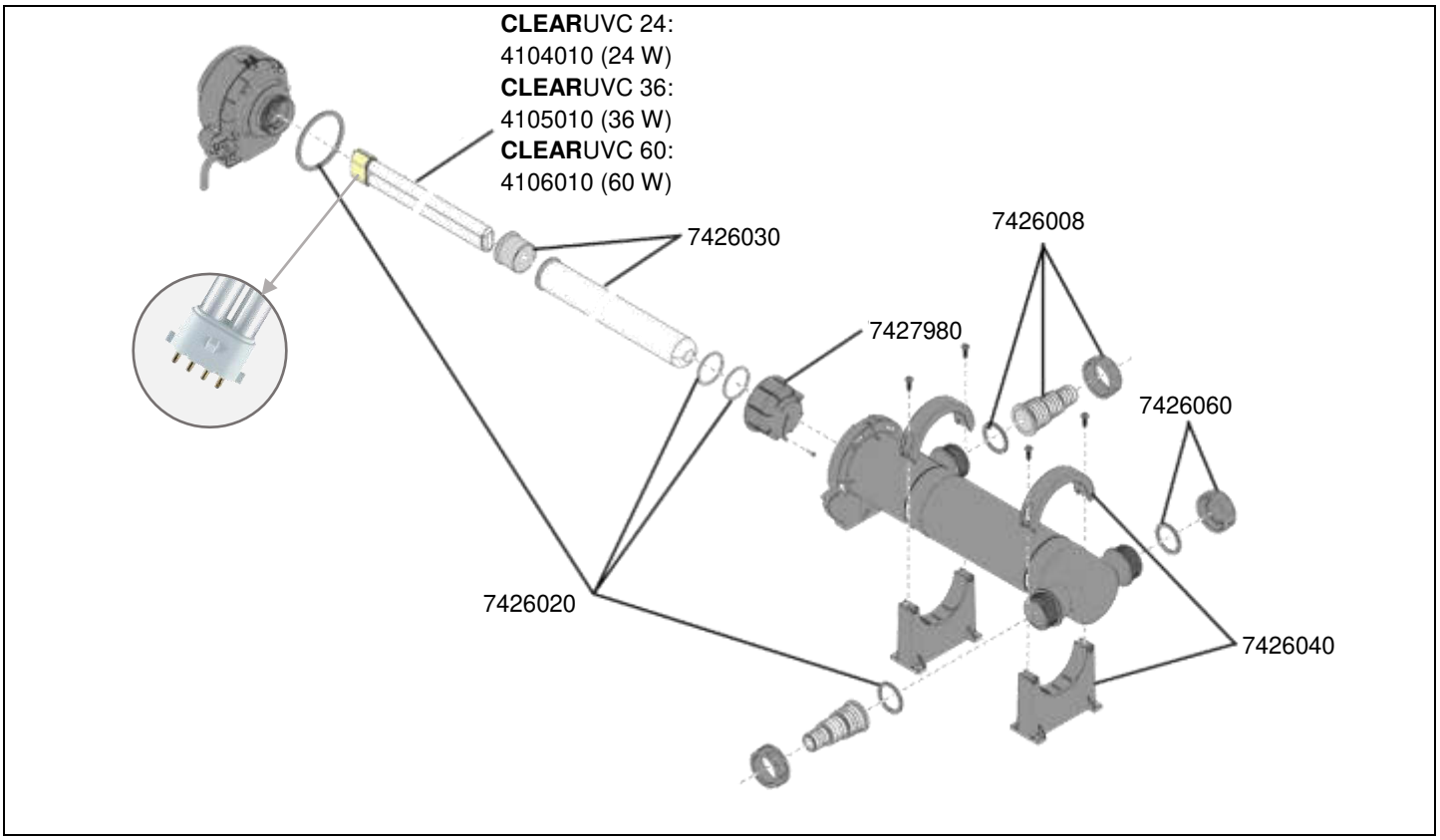

Order no.	Spare part
4104010	UVC-Spare lamp **GLOW**UVC 24 (24 Watt, **2G11**) for **CLEAR**UVC 24, type 5304
4105010	UVC-Spare lamp **GLOW**UVC 36 (36 Watt, **2G11**) for **CLEAR**UVC 36, type 5305
4106010	UVC-Spare lamp **GLOW**UVC 60 (60 Watt, **2G11**) for **CLEAR**UVC 60, type 5306
7426008	Hose connector transparent for hose-Ø 1“,1 1/4“ and 1 1/2“, clamp ring and gasket

Order no.	Spare part
7426020	Set sealing rings 1x for housing 2x for quartz tube 3x for hose connector
7426030	Quartz tube with reflector plate
7426040	Holder complete, 1x base part, 1x upper part, 2x screw
7426060	Plug with gasket
7427980	Clamp ring and safety screw for Quartz tube

© EHEIM, Germany

5320 Pond aerator AIR500
5321 Pond aerator AIR1000

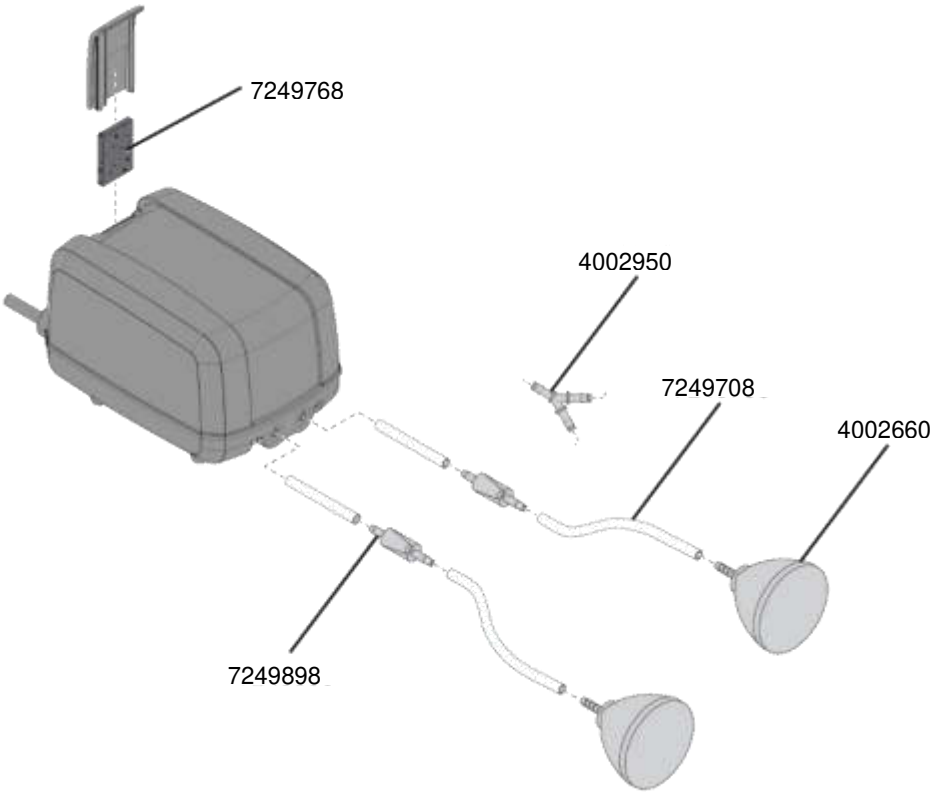

Order no.	Spare part
4002660	Air diffuser (stone) Ø 59 mm for hose-Ø 4/6 mm
4002950	Y-piece for hose Ø 4/6 mm (2 pieces)
7249708	Silicone hose Ø 4/6 mm (5 m)

Order no.	Spare part
7249768	Air filter (2 pieces)
7249898	Air non-return valve for hose Ø 4/6 mm **not suitable for CO2-Systems**

© EHEIM, Germany

5340 Ice preventer THERMO200

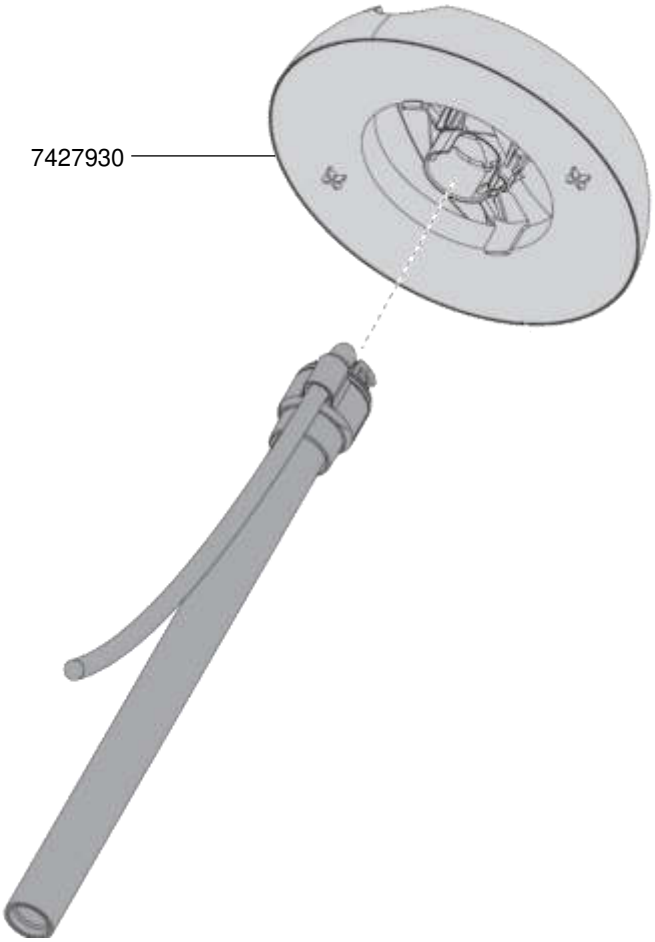

Order no.	Spare part
7427930	Floating device complete

© EHEIM, Germany

5360 Pond vacuum cleaner VAC40
5360005 Nozzle set for VAC40

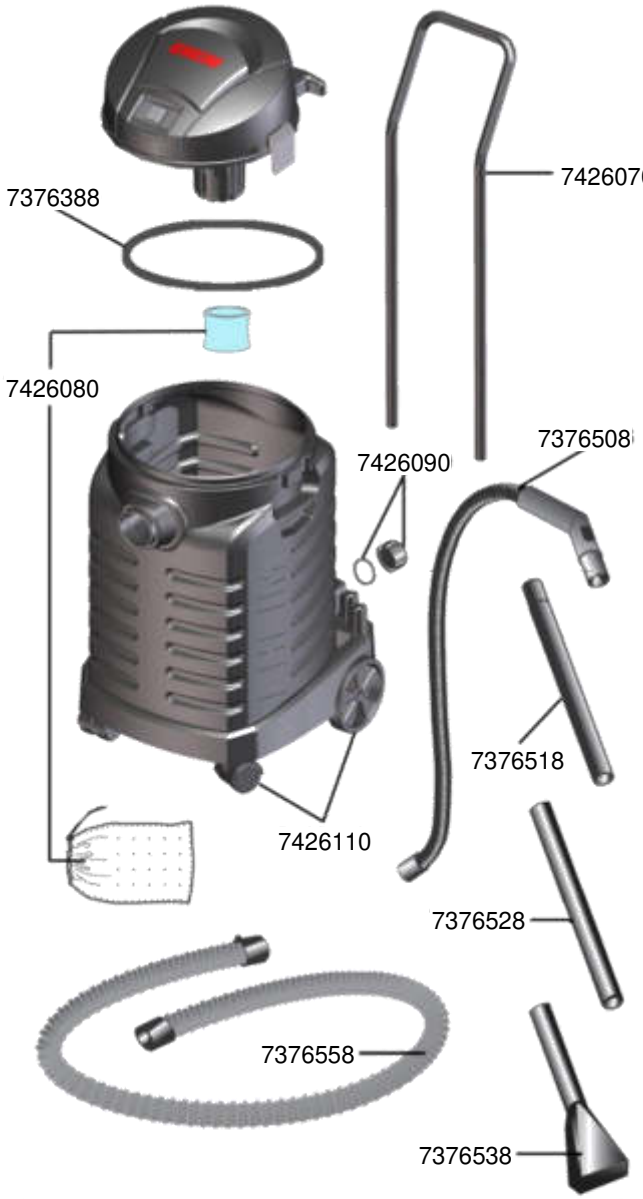

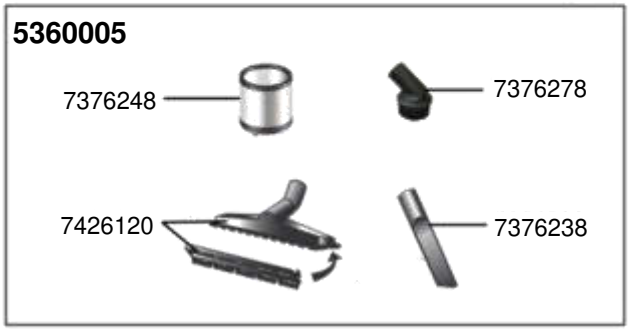

Order no.	Spare part
7376388	Sealing gasket
7376508	Suction hose (4 m)
7376518	Tube (black)
7376528	Tube (transparent)
7376538	Suction nozzle (transparent)
7376558	Drain hose (2,5 m)
7426070	Metal hanger with screws
7426080	Set filter sponge with locking part and strainer
7426090	Cap with sealing ring
7426110	Set of wheels, each 1x front- and rear wheel

Order no.	Spare part
7376238	Flat nozzle
7376248	Filter cartridge for usage as dry suction cleaner
7376278	Suction brush
7426120	Floor nozzle with brush insert

© EHEIM, Germany

4 011708 790038

7 20686 79003 2

EHEIM

EHEIM GmbH & Co. KG

Plochinger Str. 54
73779 Deizisau
Germany
Tel. +49 7153/70 02-01
Fax +49 7153/70 02-174
E-Mail: info@eheim.com

www.eheim.com

© EHEIM 7985020/07.22-en
Subject to technical or error alterations without notice.